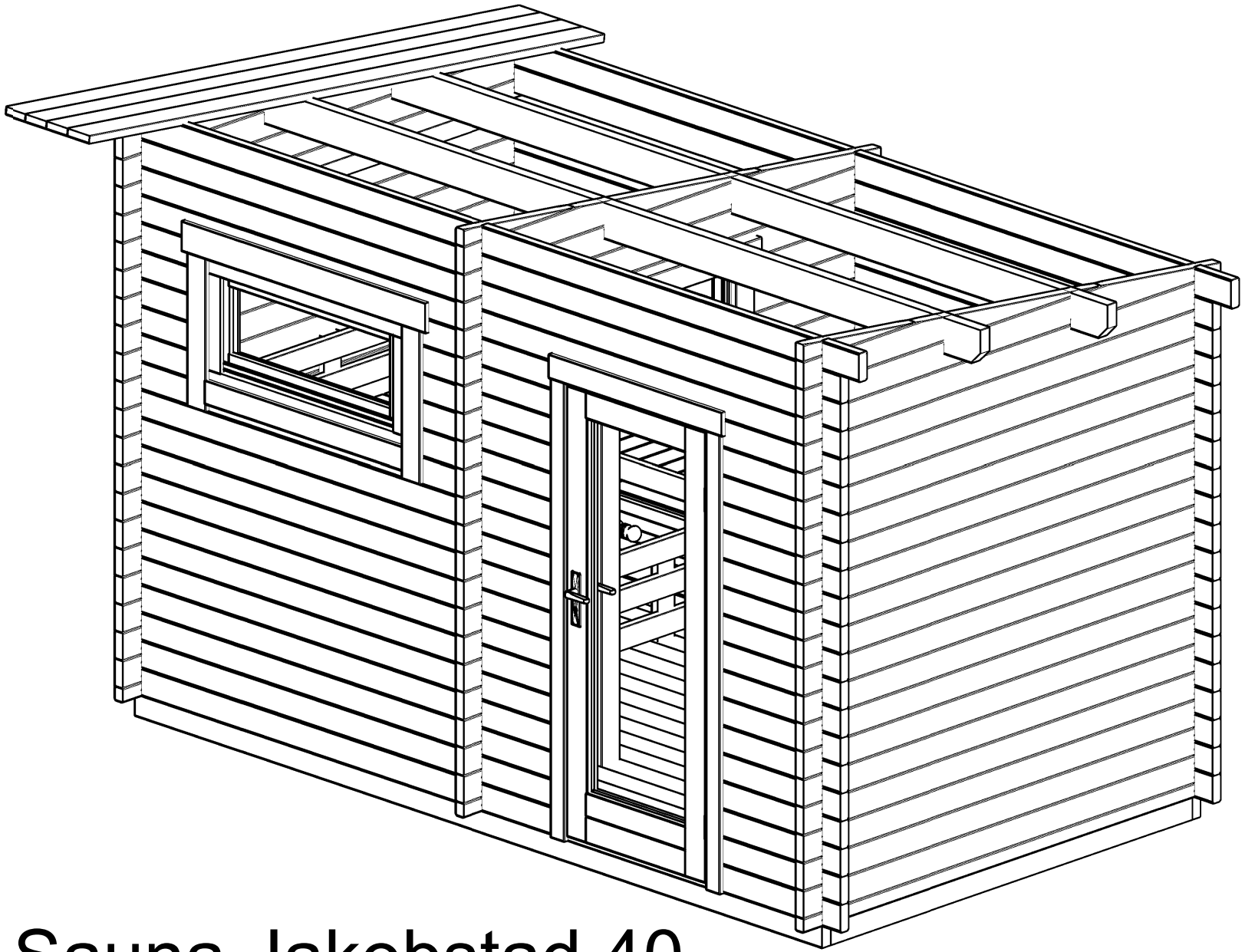

Sauna Jakobstad 40

Pos	Specification-Spezifikation-Specificatie-Nomenclature-Elementi-Especification Sauna Jakobstad 40	Qty	Profile (mm)	Lenght (mm)
001	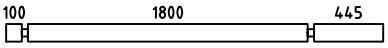	12	40x114	2425
002	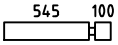	17	40x114	685
003		5	40x114	485
004	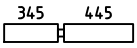	5	40x114	830
005	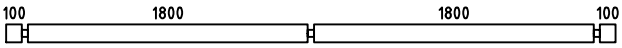	21	40x114	3920
006	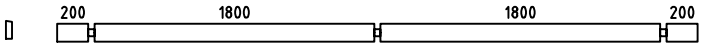	2	40x114	4120
007	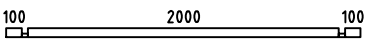	2	40x57	2280
008	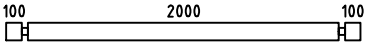	37	40x114	2280
012		1	40x57	505
013	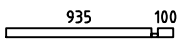	1	40x57	1075
014		16	40x114	505
015	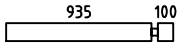	16	40x114	1075
016	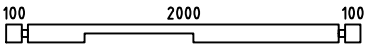	1	40x114	2280
WA-1	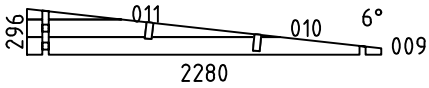	1		
WB-1	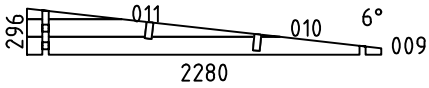	1		
WC-1	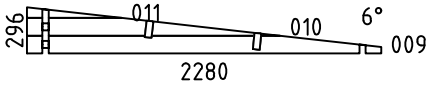	1		
F2	FOUNDATION-FUNDAMENT-FONDATION-FONDAZIONE-VIGAS DE CIMENTACIÓN 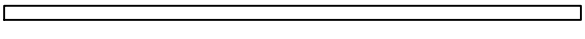	2	44x90	3710
F1	FOUNDATION-FUNDAMENT-FONDATION-FONDAZIONE-VIGAS DE CIMENTACIÓN 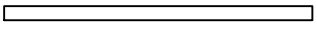	12	44x90	1982
UBS1	UPPER BENCH SUPPORT-TRAGELEISTE-STEUNEN BAR-SUPPORT-SUPPORTO-SOPORTE 	1	44x70	1912
UBS4	UPPER BENCH SUPPORT-TRAGELEISTE-STEUNEN BAR-SUPPORT-SUPPORTO-SOPORTE 	1	44x70	1195

Model	Sauna Jakobstad 40	Material	Page	1/4

Pos	Specification-Spezifikation-Specificatie-Nomenclature-Elementi-Especification Sauna Jakobstad 40	Qty	Profile (mm)	Lenght (mm)
UBS3	UPPER BENCH SUPPORT-TRAGELEISTE-STEUNEN BAR-SUPPORT-SUPPORTO-SOPORTE	2	44x70	570
UBS2	UPPER BENCH SUPPORT-TRAGELEISTE-STEUNEN BAR-SUPPORT-SUPPORTO-SOPORTE	1	44x70	555
LBS2	LOWER BENCH SUPPORT-TRAGELEISTE-STEUNEN BAR-SUPPORT-SUPPORTO-SOPORTE	2	44x70	495
LBS1	LOWER BENCH SUPPORT-TRAGELEISTE-STEUNEN BAR-SUPPORT-SUPPORTO-SOPORTE	3	44x70	470
CIS1	CEILING INSULATION SUPPORT-TRAGELEISTE-STEUNEN BAR-SUPPORT-SUPPORTO-SOPORTE	1	44x70	2000
CIS3	CEILING INSULATION SUPPORT-TRAGELEISTE-STEUNEN BAR-SUPPORT-SUPPORTO-SOPORTE	2	44x70	1712
CIS2	CEILING INSULATION SUPPORT-TRAGELEISTE-STEUNEN BAR-SUPPORT-SUPPORTO-SOPORTE	2	44x70	550
PL1	PURLIN-DAKBALK-DACHPFETTE-PANNE-ARCARECCIO-CORREA 200 1800 1800 200	2	44x144	4120
F-1	Floor board-Fussbodenbrett-Vloerplank-Lame de plancher-Tavola pavimento-Tabla de suelo	7+1	114x28	3630
F-2	Floor board-Fussbodenbrett-Vloerplank-Lame de plancher-Tavola pavimento-Tabla de suelo	22	114x28	1790
R-1	Roof board-Dachbrett-Dakplank-Volige-Tavola tetto-Tabla de tejado	37	114x28	2830
FLB-1	Floor beading 2000-Fussbodenleiste-Plinten-Moulure de finition-Listello pavimento-Liston de suelo	8	18x40	16 rmt
GB-1	Gable board 120-Giebelblende-Gevelplank-Planche de rive-Tavola di bordo-Tabla de borde	2	18x120	2870
GB-2	Gable board 120-Giebelblende-Gevelplank-Planche de rive-Tavola di bordo-Tabla de borde	2	18x120	4160
	Backrest-Rückenlehne-Rugleuning-Dossier-Schienale-Respaldo	1	235x1800	
	Bracket 140x40-Lochplatte-Gatenplaat-Connecteur métallique-Piastre forate-Placas perforadas	2	140x40	
CI	Ceiling Insulation-Deckelsolation-Plafondisolatie-Isolation du plafond-Isolamento del soffitto-Aislamiento de techo	2	1990x895	
	Door kit-Tür satz-Deur set-Kit porte-Kit porta-Kit para puerta	1		
	Lower Bench-Untere Bank-Onderbank-Banc inférieur-Banco inferiore-Banco inferior	1	300x1998	
	Lower bench face-Bank unterstützung-Bankje ondersteuning-Dossier banc-Banko schienale-Banco respaldo	1	395x1998	
R8x80	Round head bolt kit 8x80-Schloßschraube-Slotbout-Boulon tête ronde-Bulloni testa tonda-Tornillo cabeza redonda	4	8x80	
	Sauna ventilation kit-Außengitter-Schoepenrooster-Panneau de ventilation-Griglia di ventilazione-Rejilla de ventilacion	1		
S4x50	Screw 4x50-Schraube-Schroef-Vis-Vite-Tornillo	30	4x50	

Pos	Specification-Spezifikation-Specificatie-Nomenclature-Elementi-Especification Sauna Jakobstad 40	Qty	Profile (mm)	Lenght (mm)
S5x70	Screw 5x70-Schraube-Schroef-Vis-Vite-Tornillo 	40	5x70	
	Upper bench 2-Obere Bank-Bovenbank-Banc supérieur-Banco superiore-Banco superior 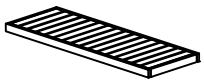	1	500x1200	
	Upper bench face-Bank unterstützung-Bankje ondersteuning-Dossier banc-Banko schienale-Banco respaldo 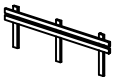	1	845x1998	
	Upper bench-Obere Bank-Bovenbank-Banc supérieur-Banco superiore-Banco superior 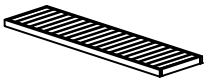	1	600x1998	
	Ventilation panel kit-Außengitter-Schoepenrooster-Panneau de ventilation-Griglia di ventilazione-Rejilla de ventilacion 	1		
	Lower Bench-Untere Bank-Onderbank-Banc inférieur-Banco inferiore-Banco inferior 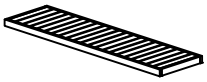	1	300x900	
	Lower Bench-Untere Bank-Onderbank-Banc inférieur-Banco inferiore-Banco inferior 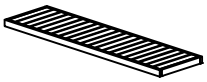	1	400x1998	
	Backrest-Rückenlehne-Rugleuning-Dossier-Schienale-Respaldo 	1	235x1600	
	WINDOW 1100x540 W0DKN 1100x540-40 ISO TEMPERED 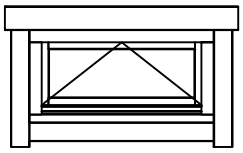	1		
	DOOR 690x1900 SD Sauna 690x1900-40 R 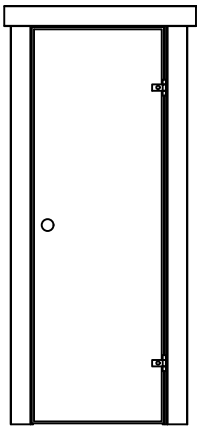	1		
	DOOR 800x1900 SD08 F 800x1900-40 ISO R ISO TEMPERED 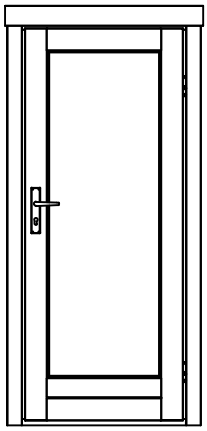	1		

Model Sauna Jakobstad 40	Material	Page 3/4

Pos	Specification-Spezifikation-Specificatie-Nomenclature-Elementi-Especification Sauna Jakobstad 40	Qty	Profile (mm)	Lenght (mm)
L1	Sauna door trim board 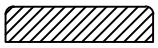	1	28x95	900
L2	Sauna door trim board 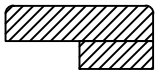	1	28x95 28x45	900
L3	Sauna door trim board 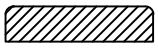	2	28x95	1870
L4	Sauna door trim board 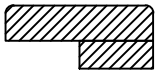	2	28x95 28x45	1870

Model Sauna Jakobstad 40	Material	Page 4/4

H = 1.600 m
TOTAL: 7.20 m2

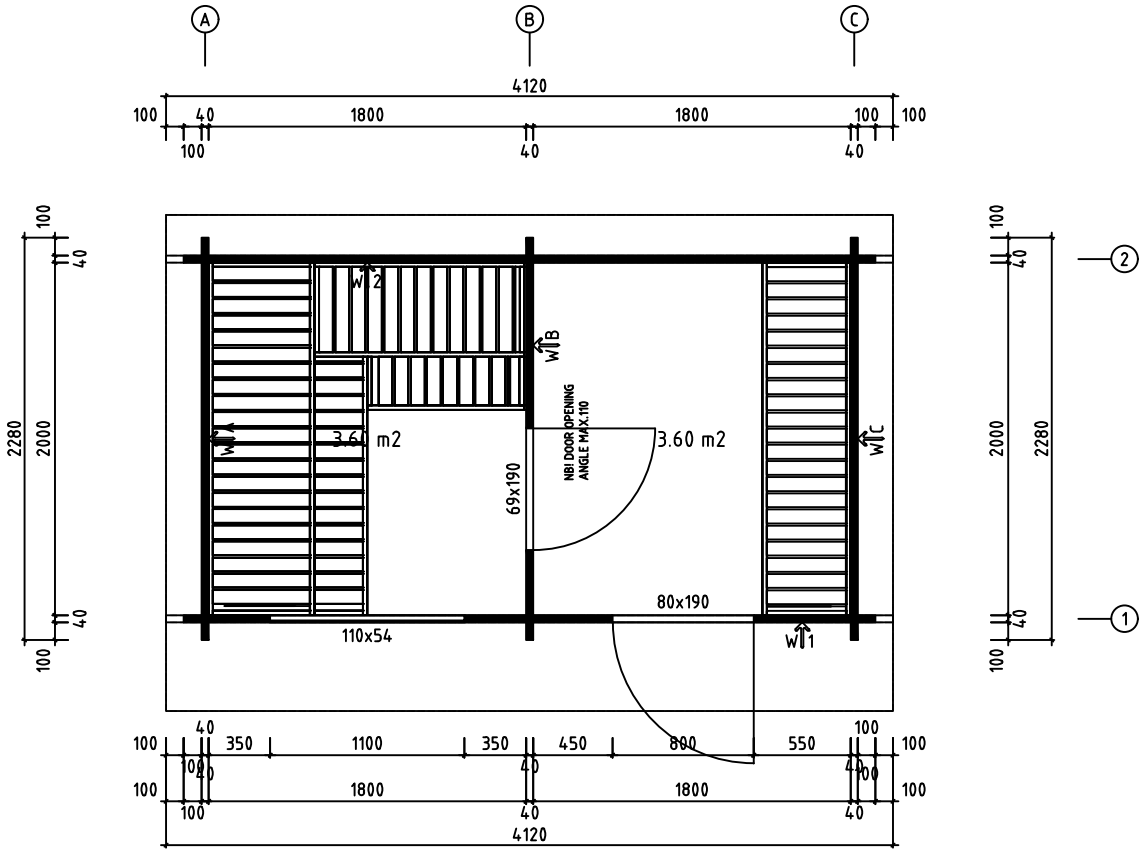

0 0.5m 1.0m 2.0m

Model	Sauna Jakobstad 40	Page	
Drawing	PLAN	Scale	1:30
Material		Date	14.01.2025
File	Sauna Jakobstad 40	Drawn by	

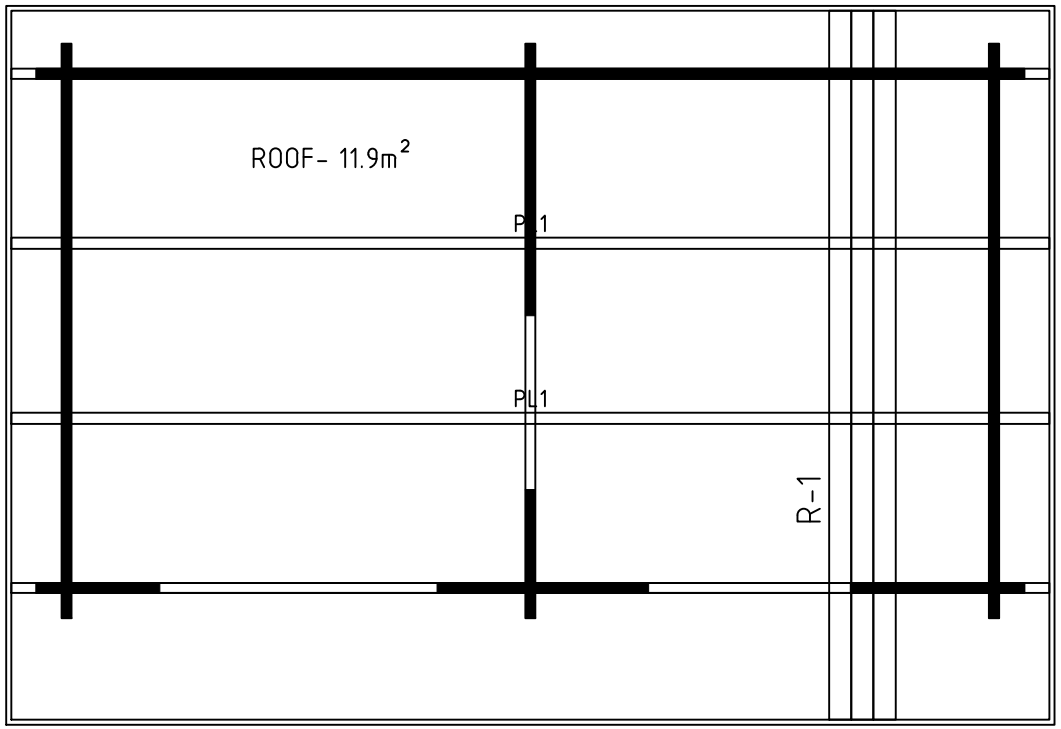

0 0.5m 1.0m 2.0m

Model	Sauna Jakobstad 40	Page	
Drawing	ROOF	Scale	1:30
Material		Date	14.01.2025
File	Sauna Jakobstad 40	Drawn by	

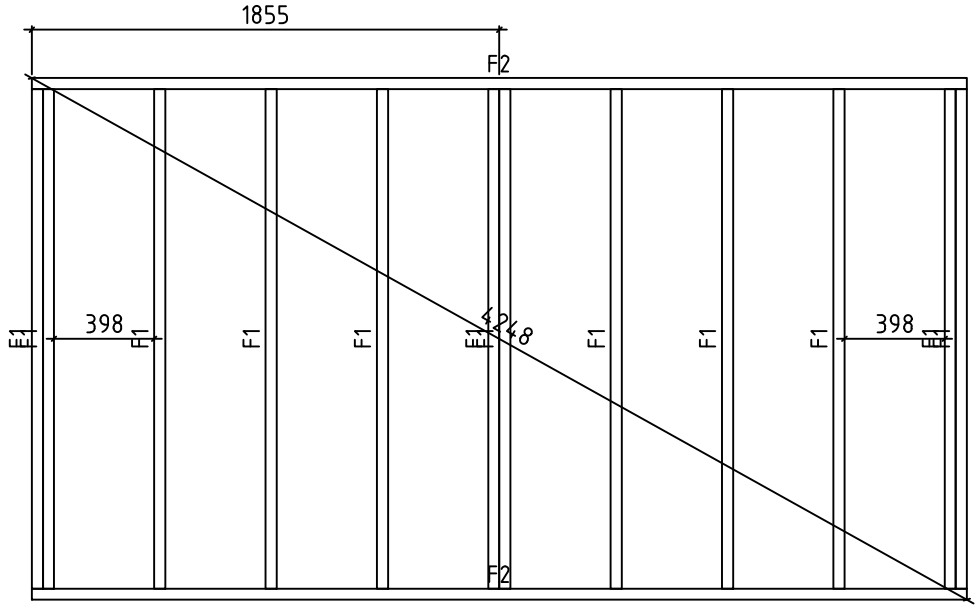

0 0.5m 1.0m 2.0m

Model	Sauna Jakobstad 40	Page	
Drawing	FOUNDATION	Scale	1:30
Material		Date	14.01.2025
File	Sauna Jakobstad 40	Drawn by	

H = 1.550 m
TOTAL: 7.20 m2

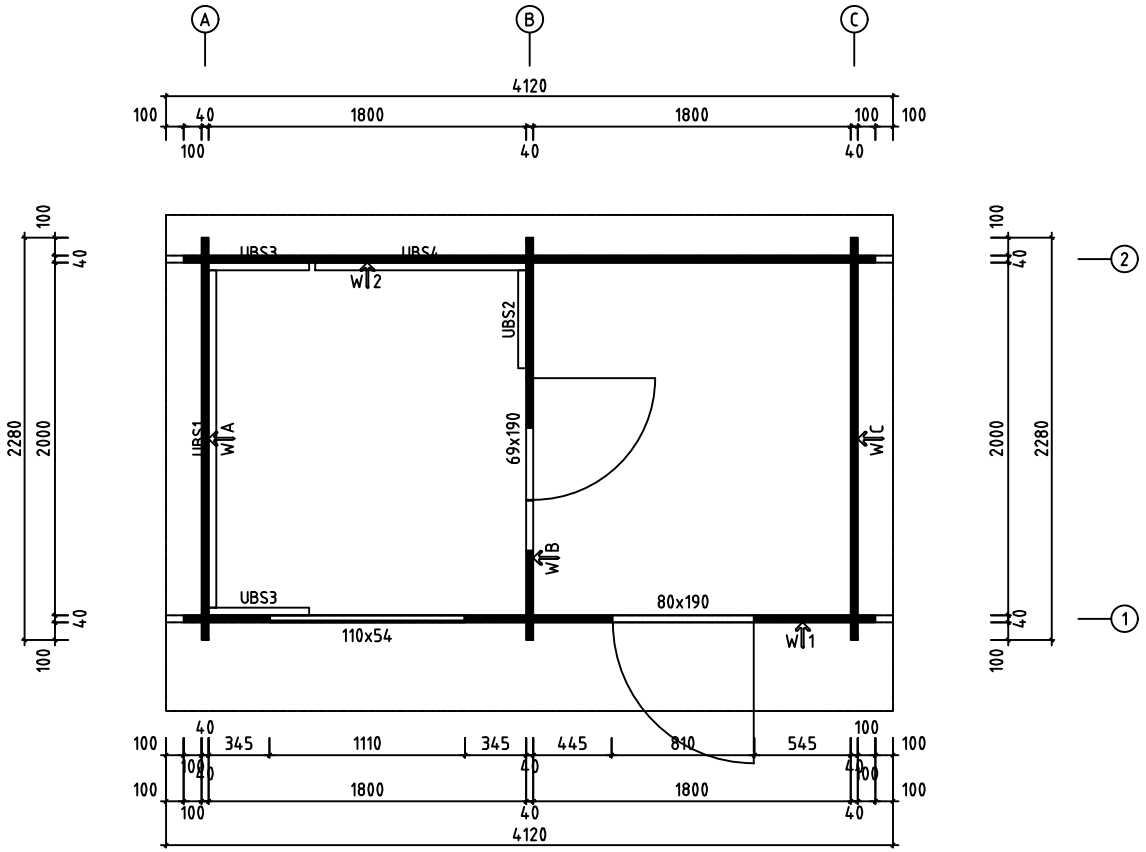

Model	Sauna Jakobstad 40	Page	
Drawing	UPPER BENCH SUPPORT	Scale	1:30
Material		Date	14.01.2025
File	Sauna Jakobstad 40	Drawn by	

H = 1.850 m
TOTAL: 7.20 m2

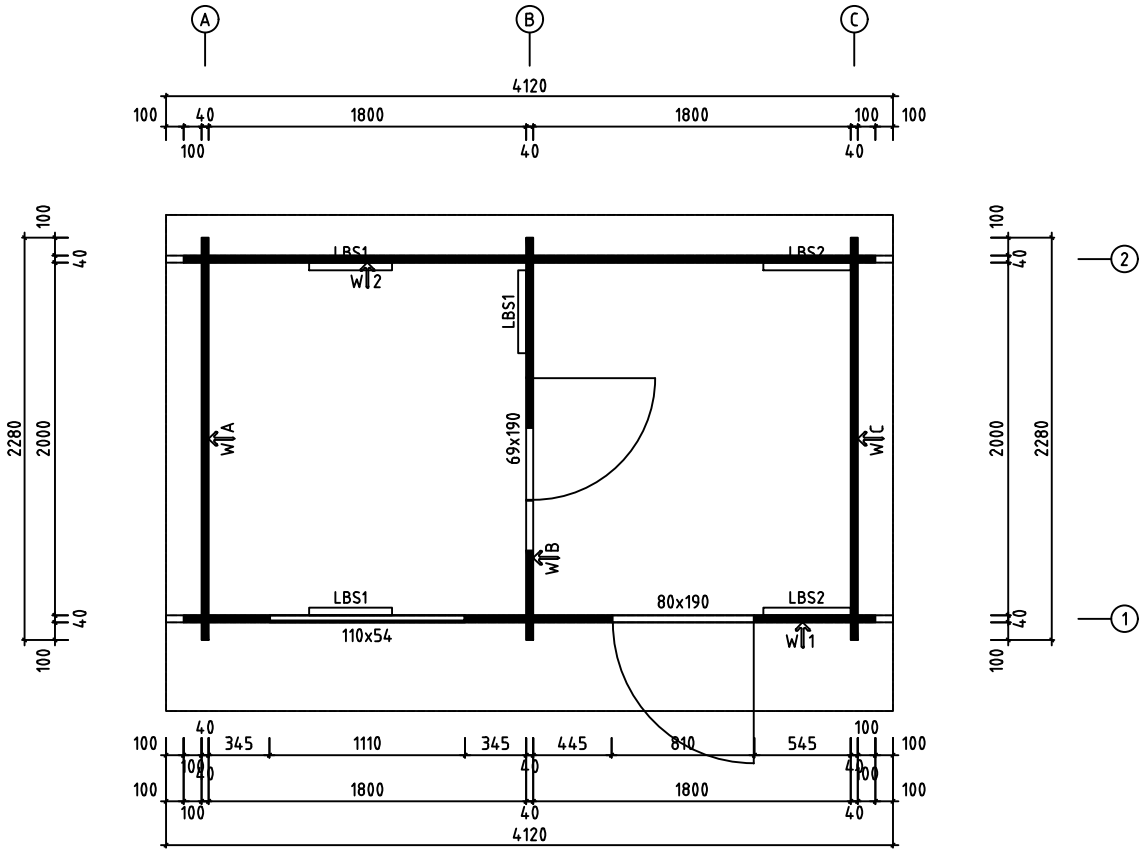

Model	Sauna Jakobstad 40	Page	
Drawing	LOWER BENCH SUPPORT	Scale	1:30
Material		Date	14.01.2025
File	Sauna Jakobstad 40	Drawn by	

H = 1.800 m
TOTAL: 7.20 m2

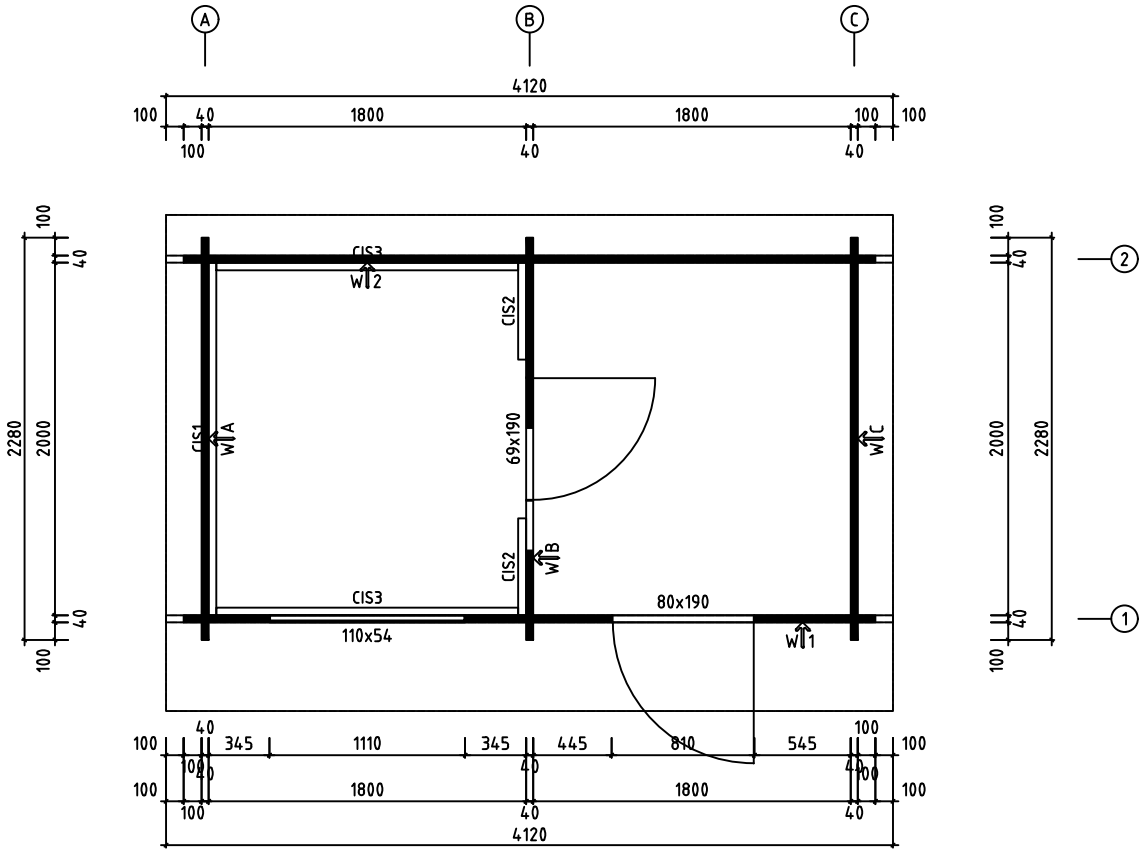

Model	Sauna Jakobstad 40	Page	
Drawing	CEILING INSULATION SUPPORT	Scale	1:30
Material		Date	14.01.2025
File	Sauna Jakobstad 40	Drawn by	

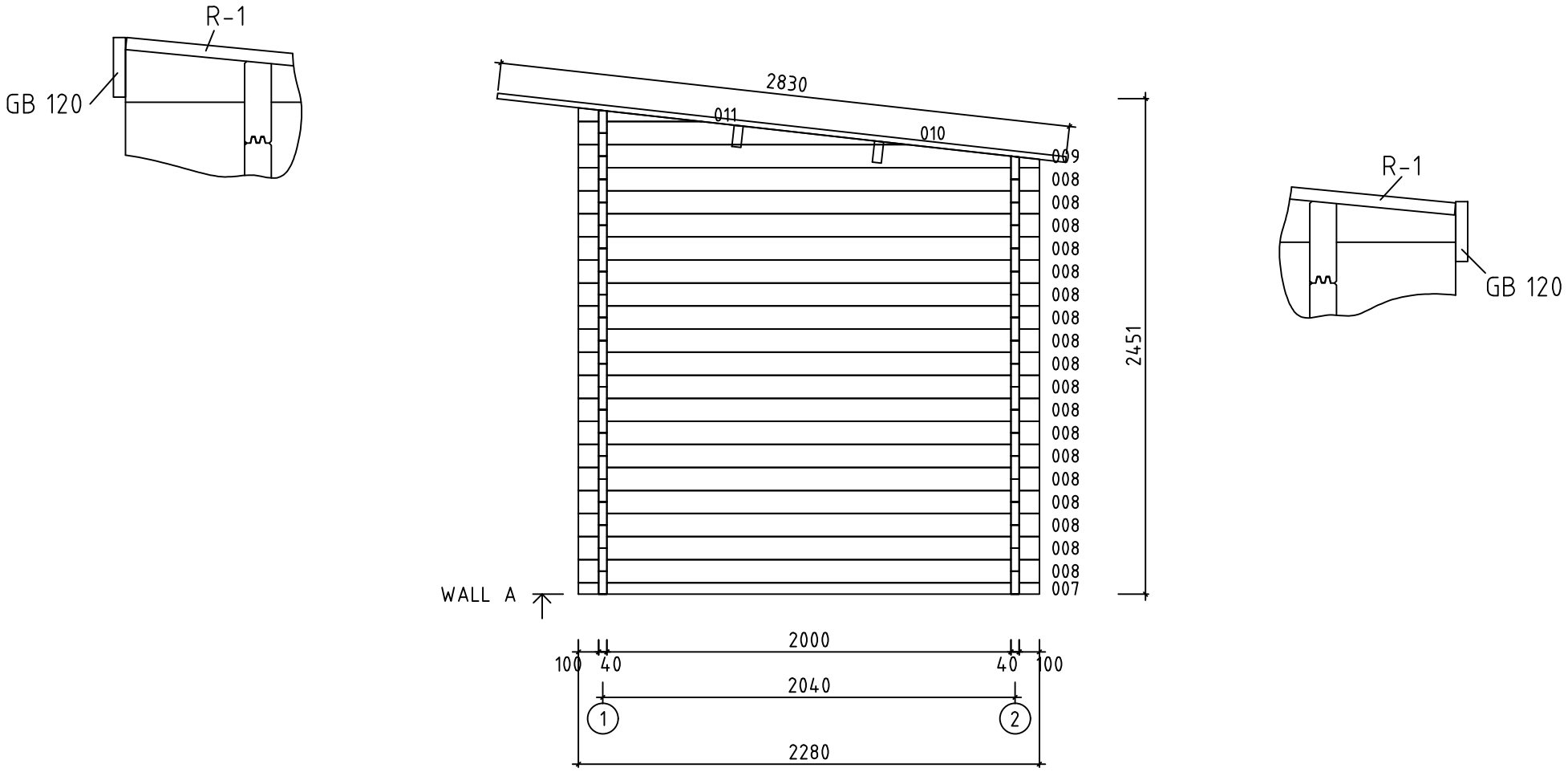

0 0.5m 1.0m 2.0m

Model	Sauna Jakobstad 40	Page	3
Drawing	WALL A	Scale	1:30
Material	4x11.4	Date	14.01.2025
File	Sauna Jakobstad 40	Drawn by	

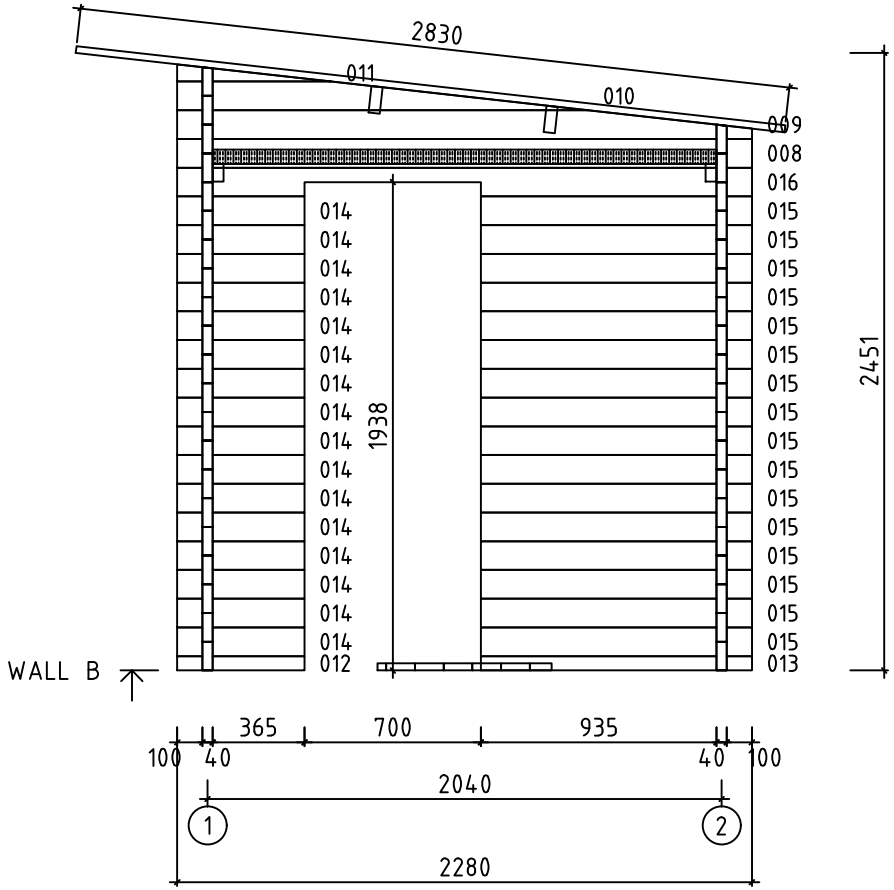

0 0.5m 1.0m 2.0m

Model	Sauna Jakobstad 40	Page	4
Drawing	WALL B	Scale	1:30
Material	4x11.4	Date	14.01.2025
File	Sauna Jakobstad 40	Drawn by	

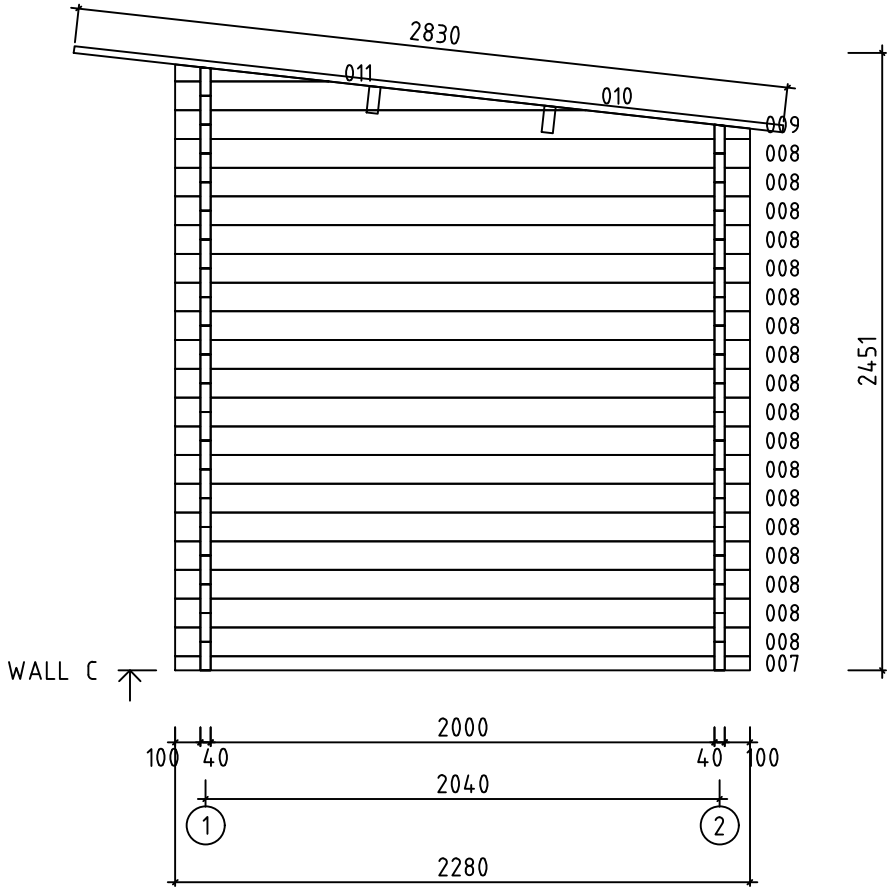

0 0.5m 1.0m 2.0m

Model	Sauna Jakobstad 40	Page	5
Drawing	WALL C	Scale	1:30
Material	4x11.4	Date	14.01.2025
File	Sauna Jakobstad 40	Drawn by	

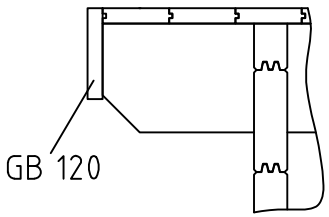

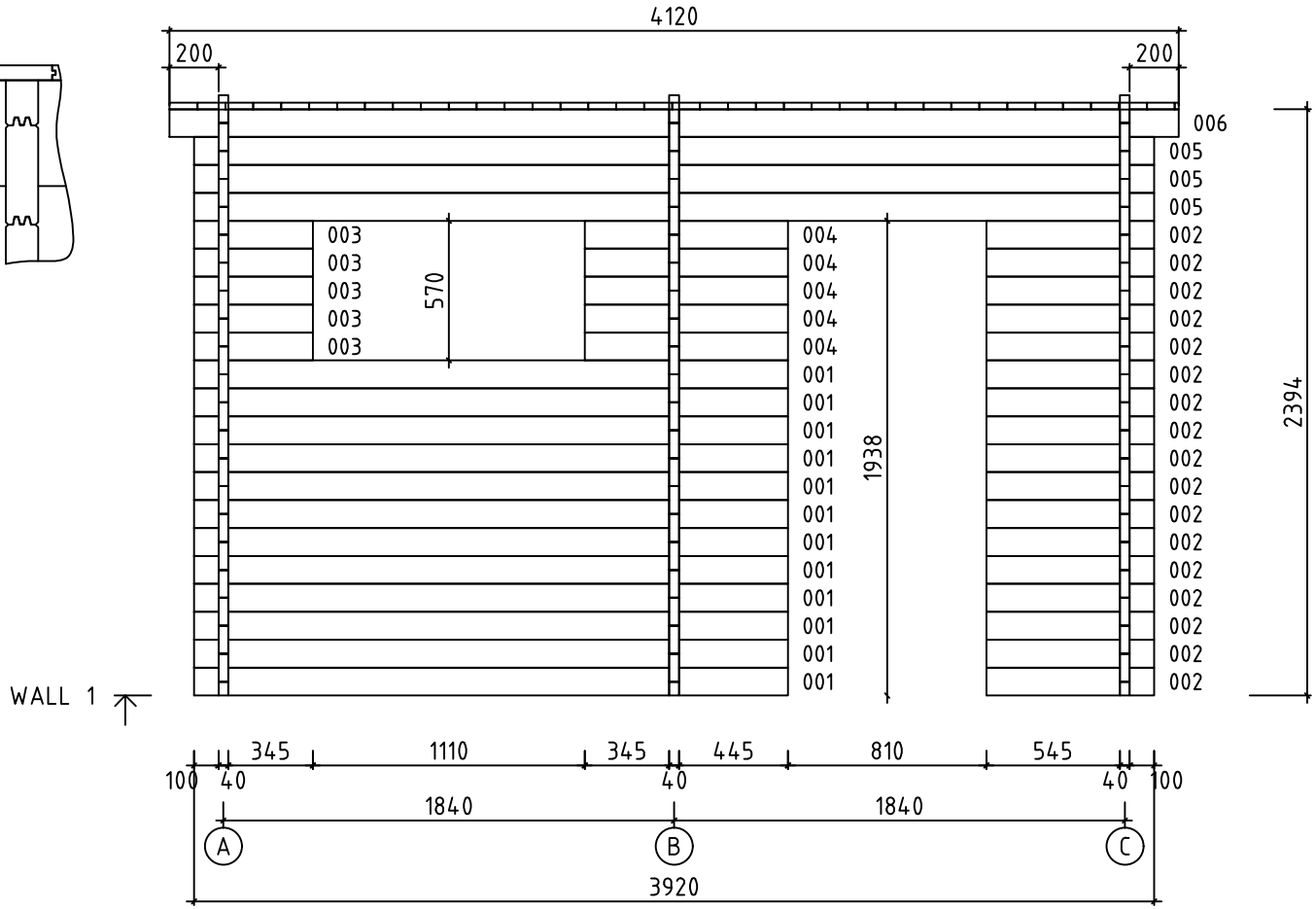

0 0.5m 1.0m 2.0m

Model	Sauna Jakobstad 40	Page	6
Drawing	WALL 1	Scale	1:30
Material	4x11.4	Date	14.01.2025
File	Sauna Jakobstad 40	Drawn by	

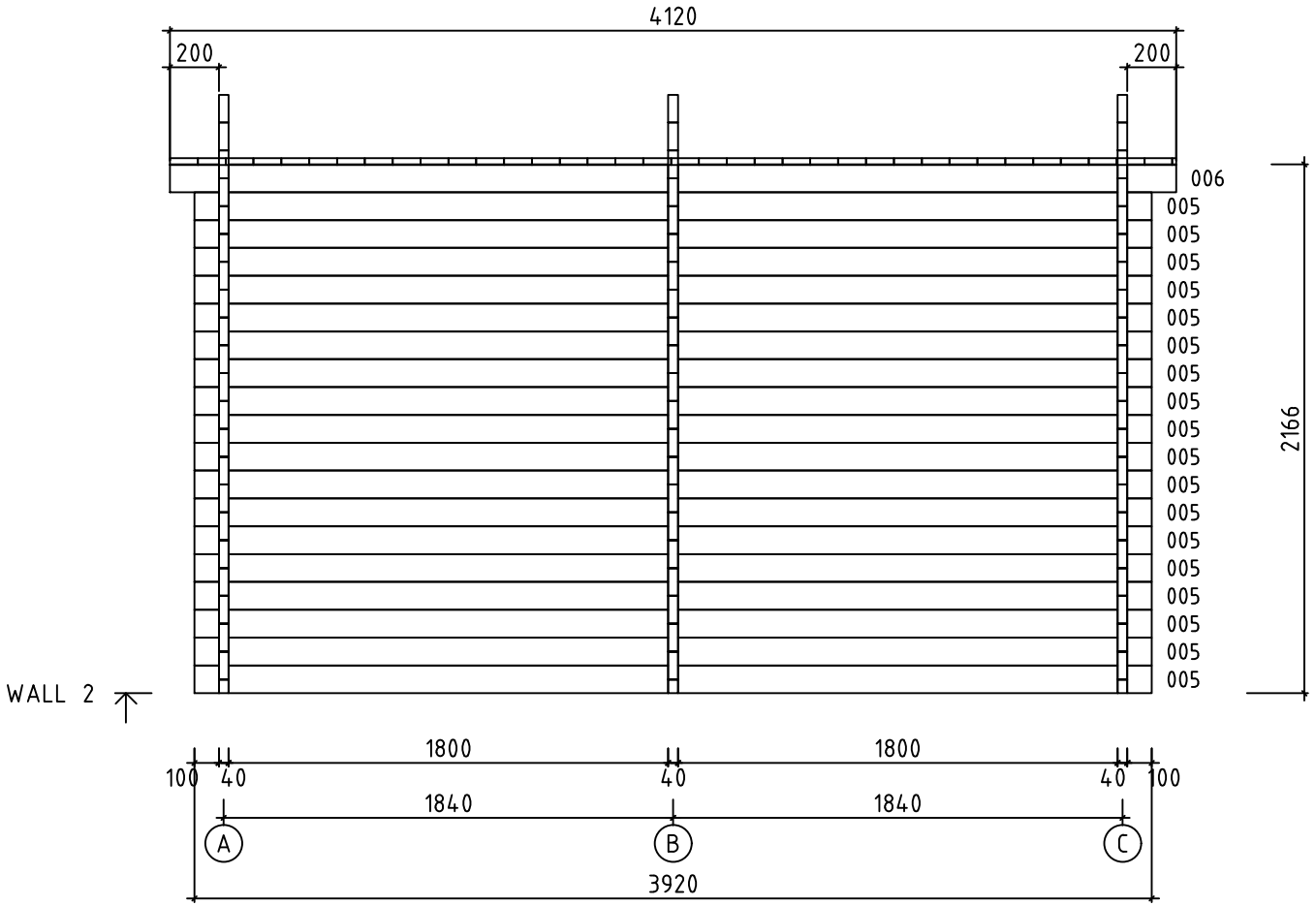

0 0.5m 1.0m 2.0m

Model	Sauna Jakobstad 40	Page	7
Drawing	WALL 2	Scale	1:30
Material	4x11.4	Date	14.01.2025
File	Sauna Jakobstad 40	Drawn by	

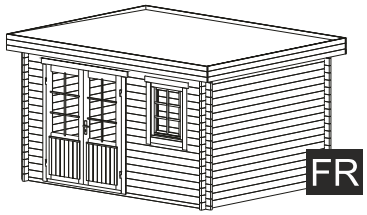

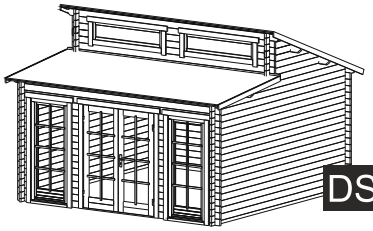

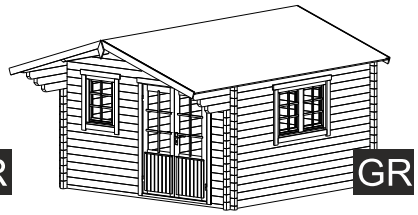

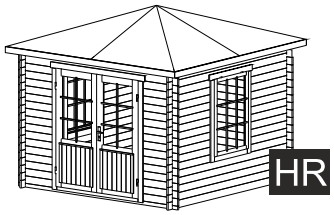

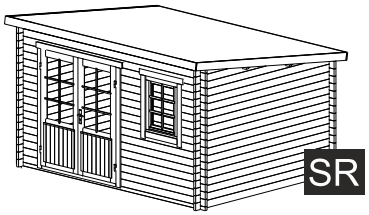

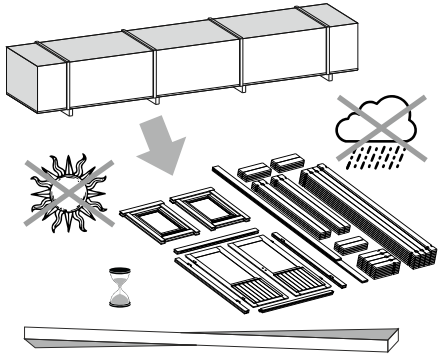

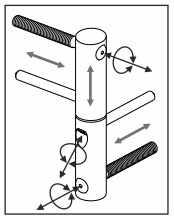

ADJUSTABLE HINGES

3.

TYPE- A
5x90

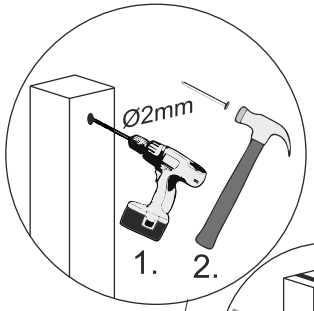

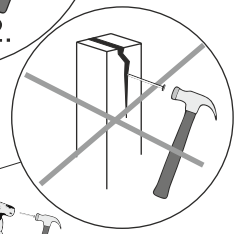

4.

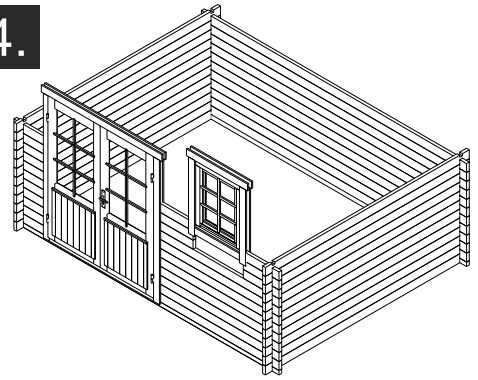

OPTIONS

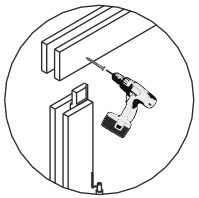

TYPE- B
4x60

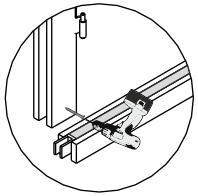

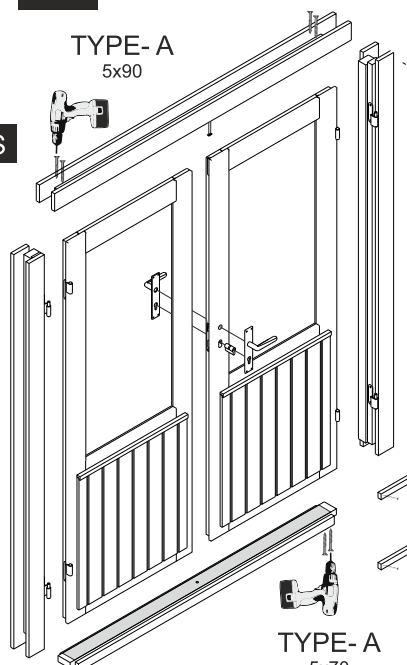

TYPE- A
5x70

NB!



1.

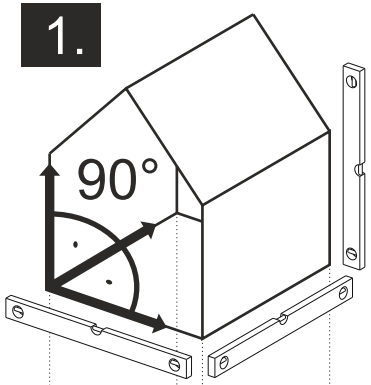

5.

OPTIONS

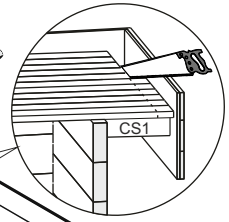

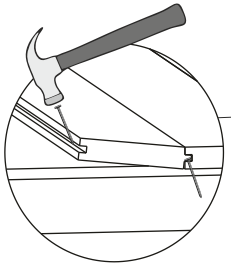

2.

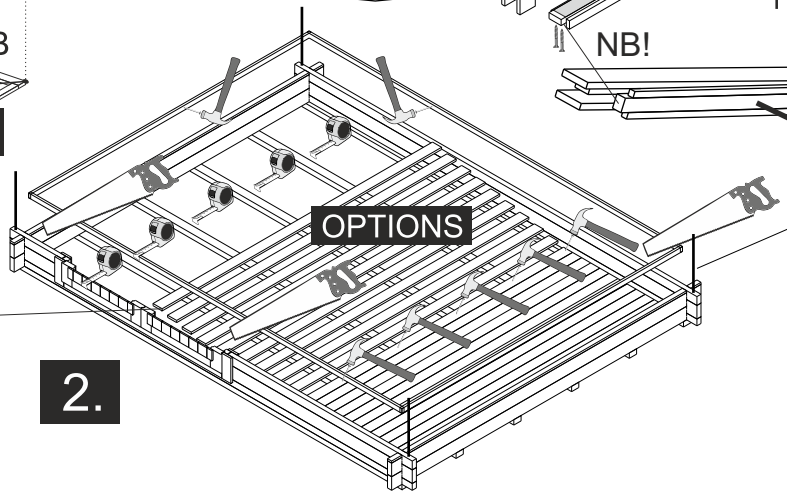

OPTIONS

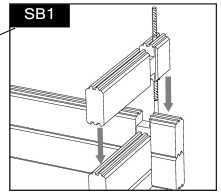

The guide is illustrative. This guide is not project specification.
Der Leitfaden ist illustrativ. Dieser Leitfaden ist keine Projektspezifikation.
De gids is illustratief. Deze gids is geen projectspecificatie.

5.

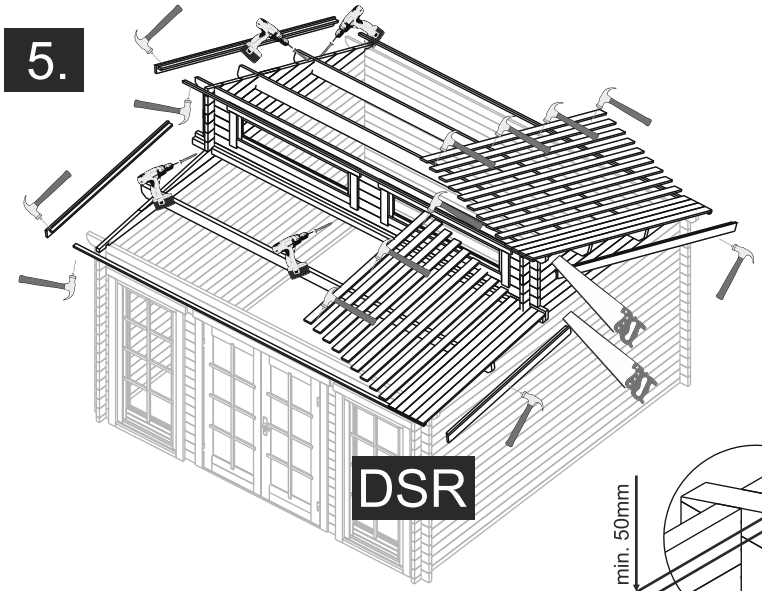

5.

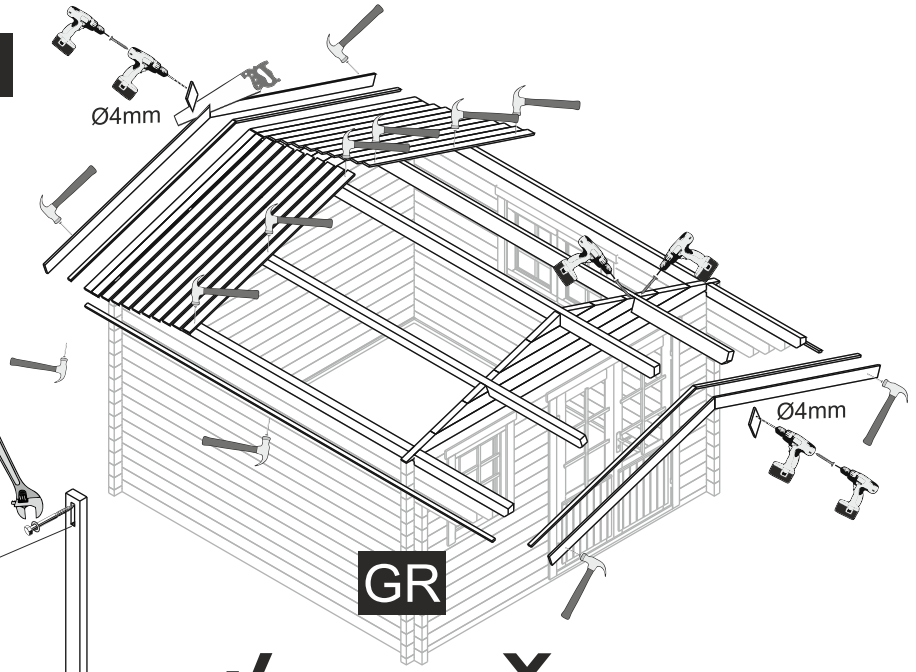

OPTIONS

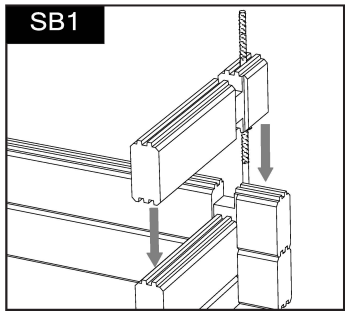

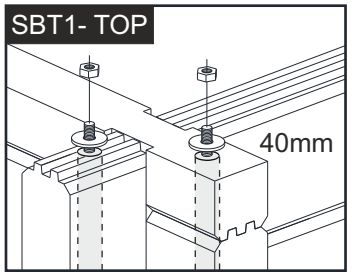

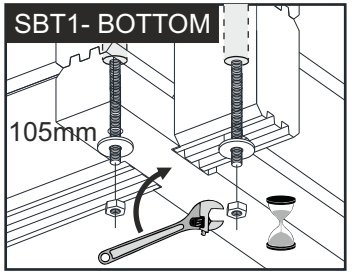

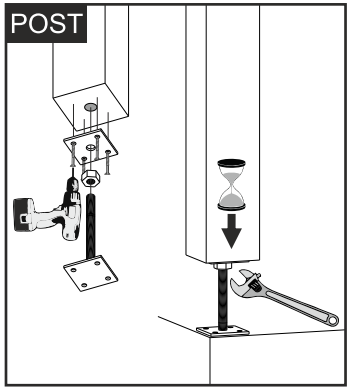

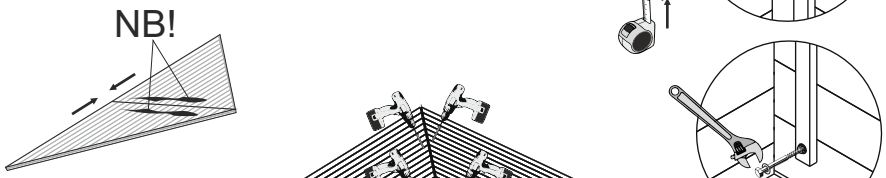

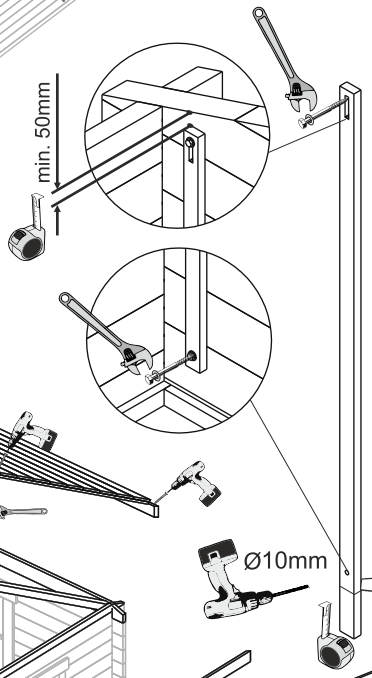

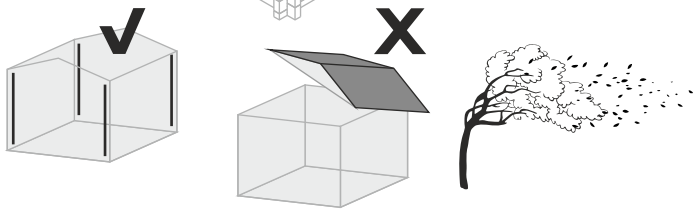

OPTIONS- STORM BRACES

5.

5.

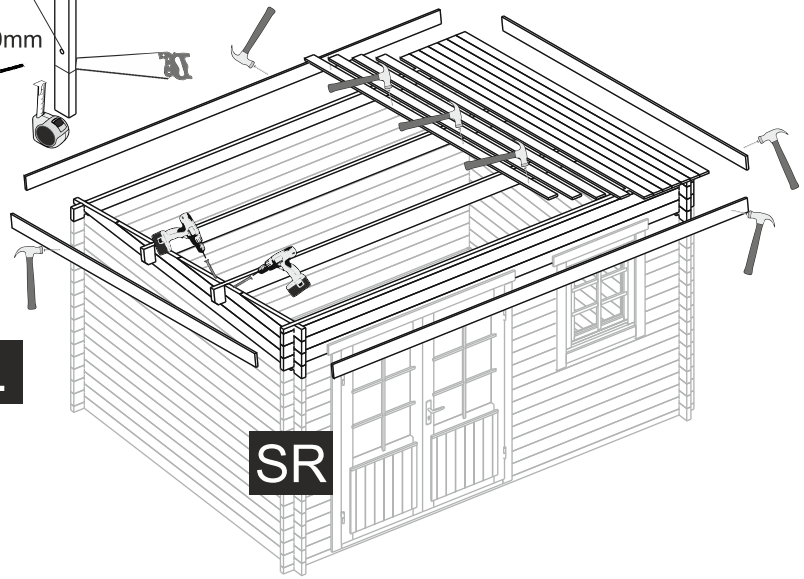

Öffnung/Opening

A

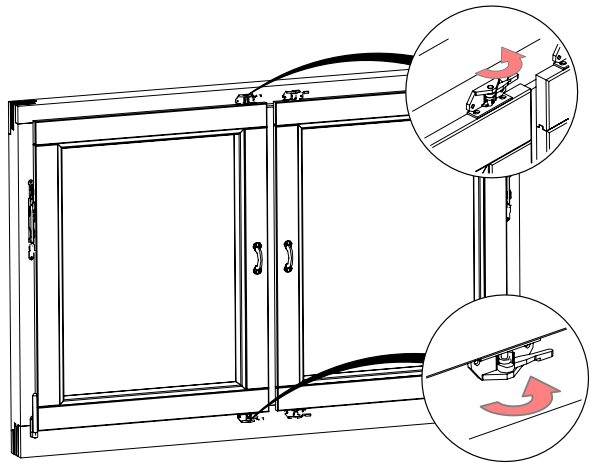

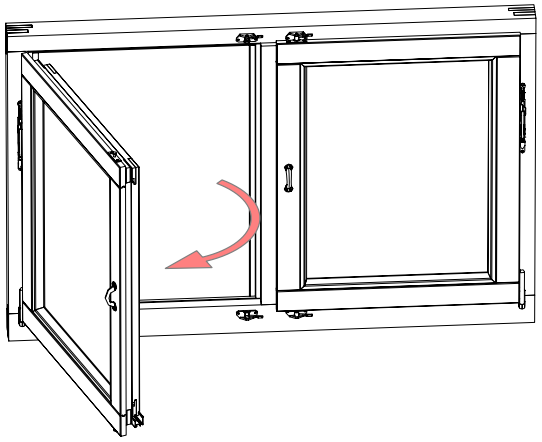

B

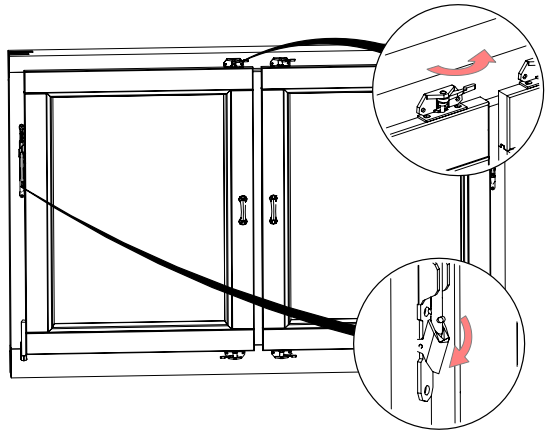

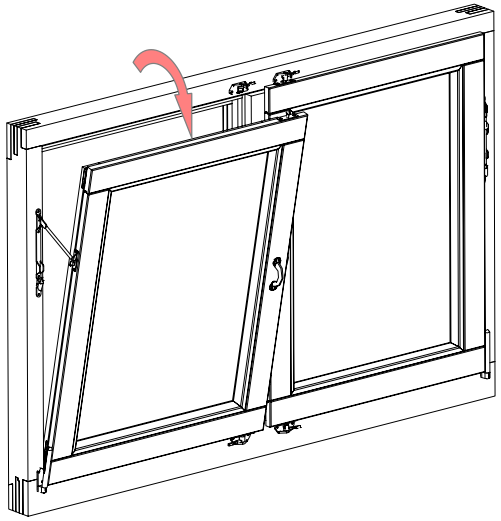

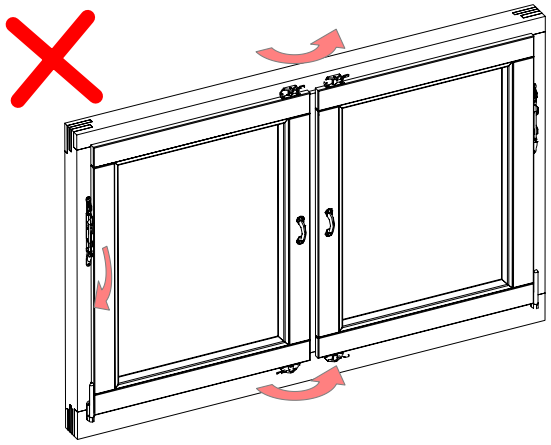

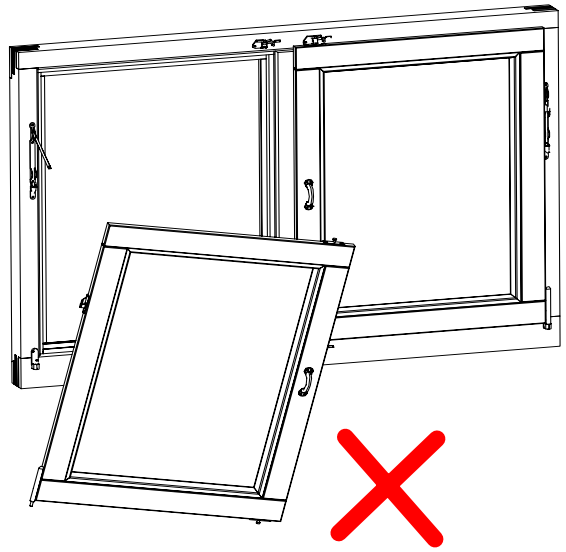

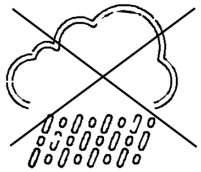

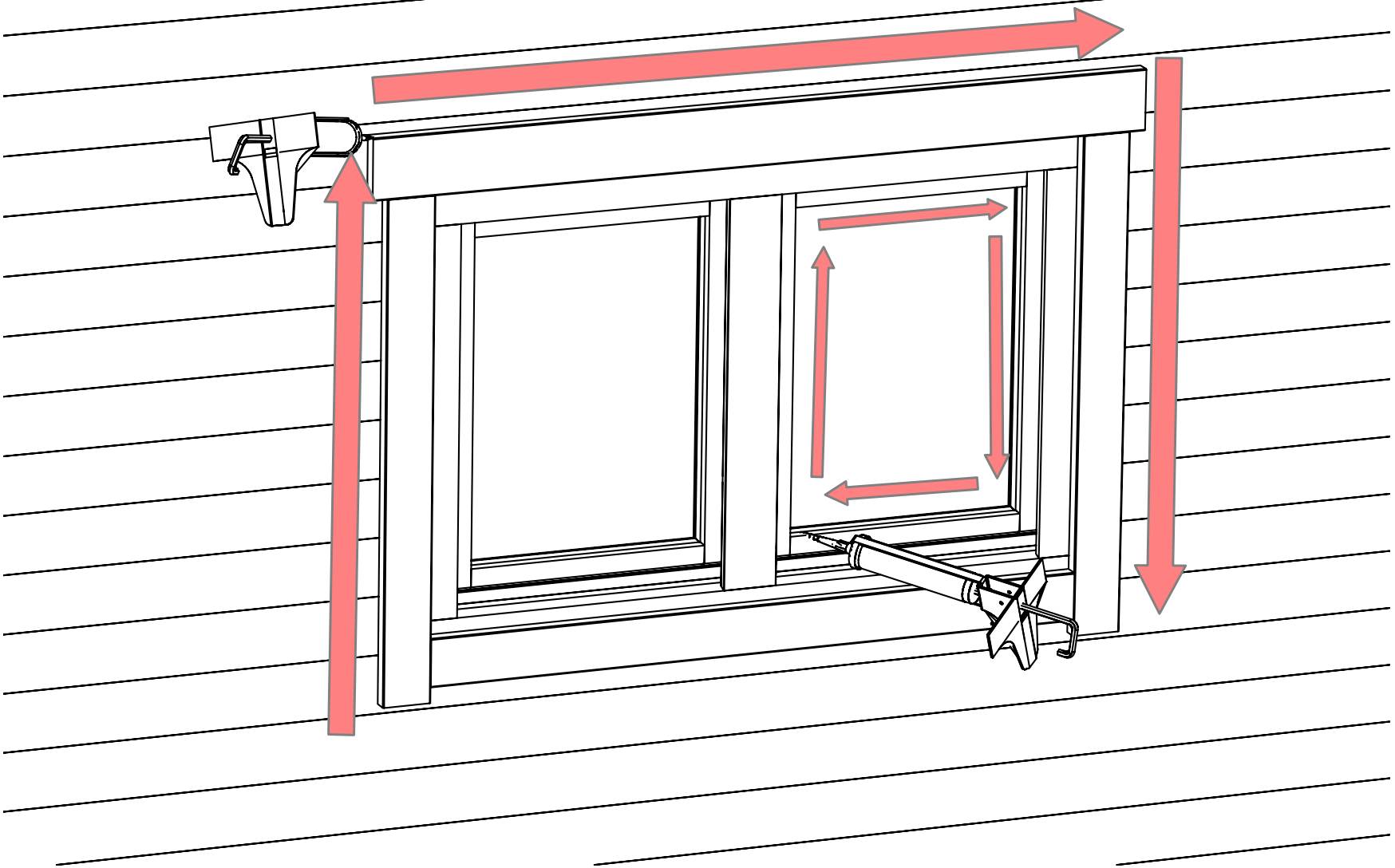

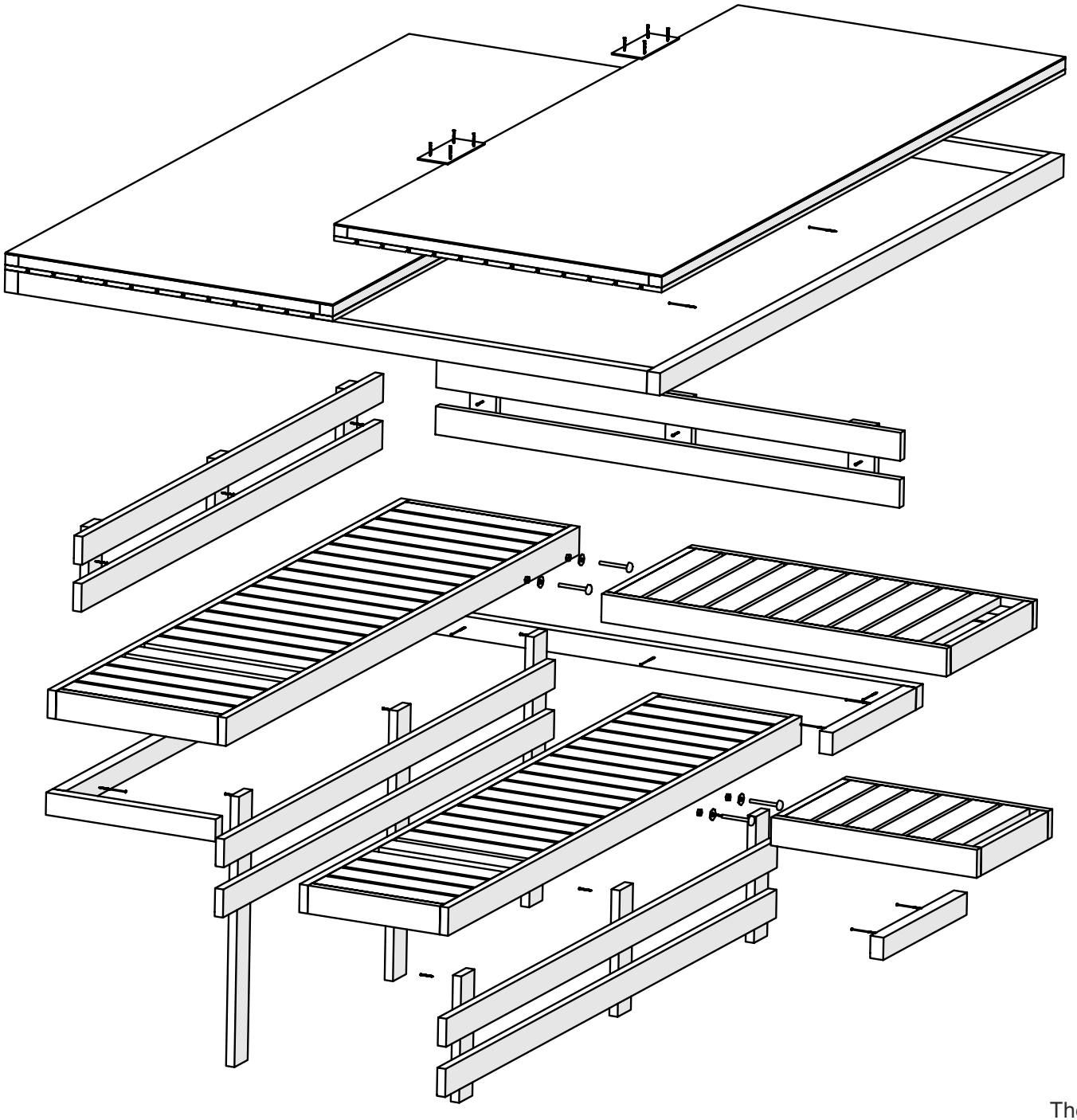

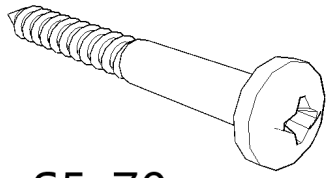

S5x70



C8x80

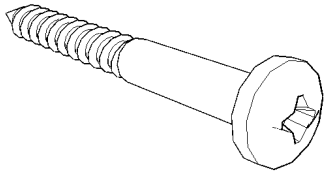

The guide is illustrative. This guide is not project specification.
Der Leitfaden ist illustrativ. Dieser Leitfaden ist keine Projektspezifikation.
De gids is illustratief. Deze gids is geen projectspecificatie.