POD Camping 400

NB! Please read whole installation manual before start.

All given measurements are in millimeters.





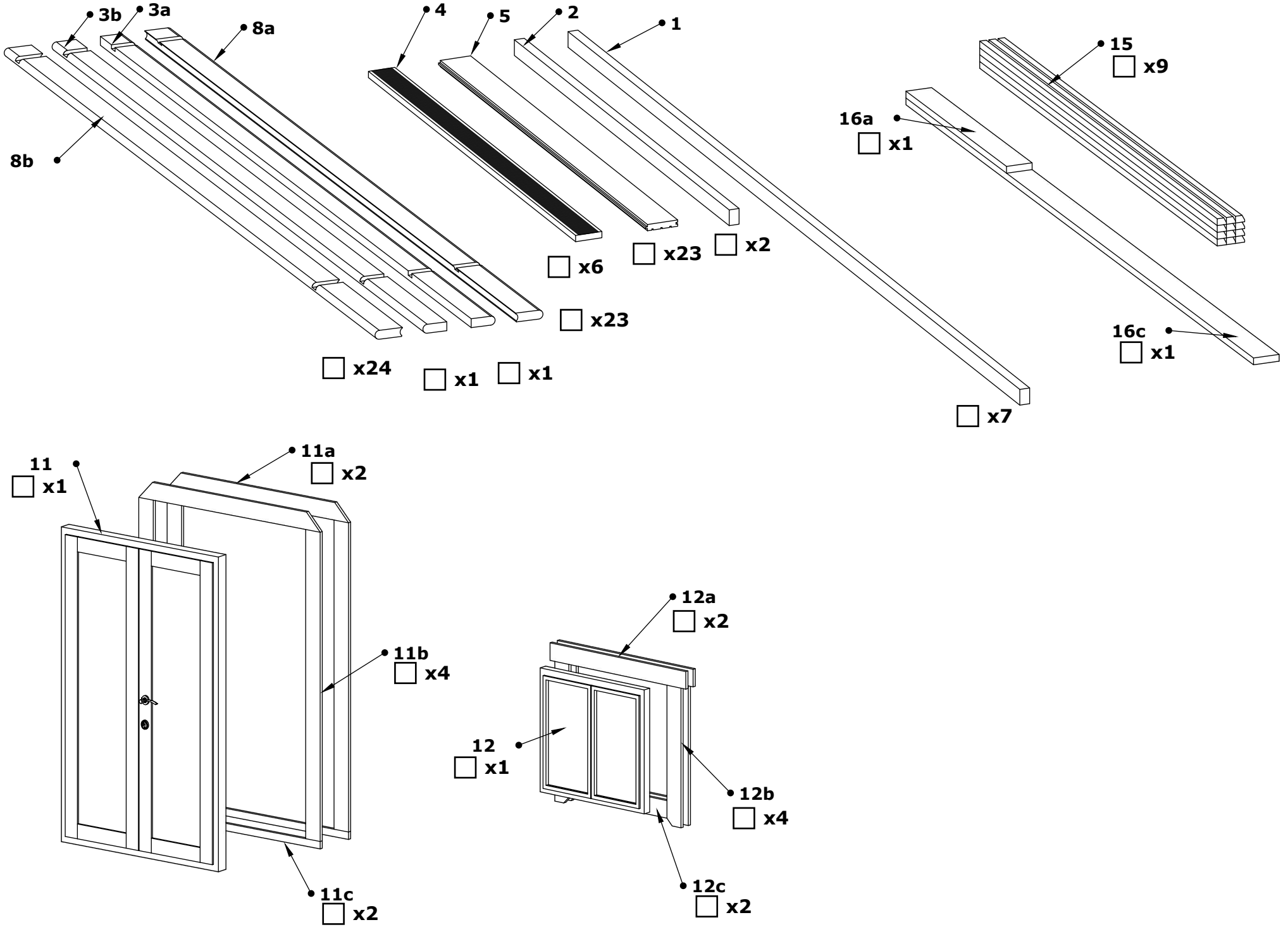
3b
3a
8a
8b
x24
x1
x1
4
5
2
1
x6
x23
x2
x23
15
x9
16a
x1
16c
x1
x7
11
x1
11a
x2
11b
x4
11c
x2
12a
x2
12
x1
12b
x4
12c
x2

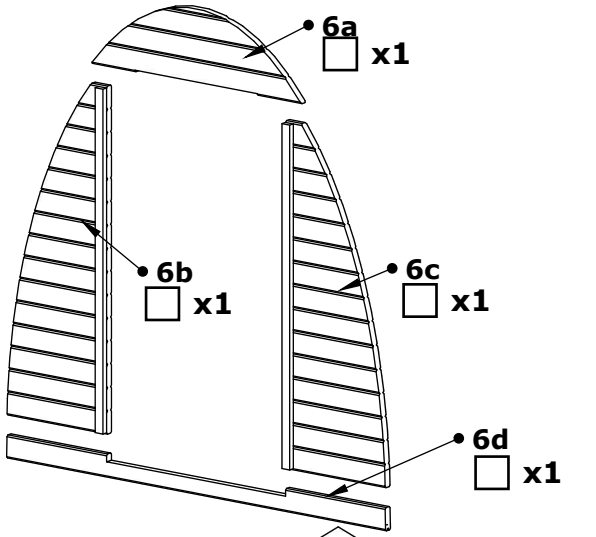
6a
x1
6b
x1
6c
x1
6d
x1

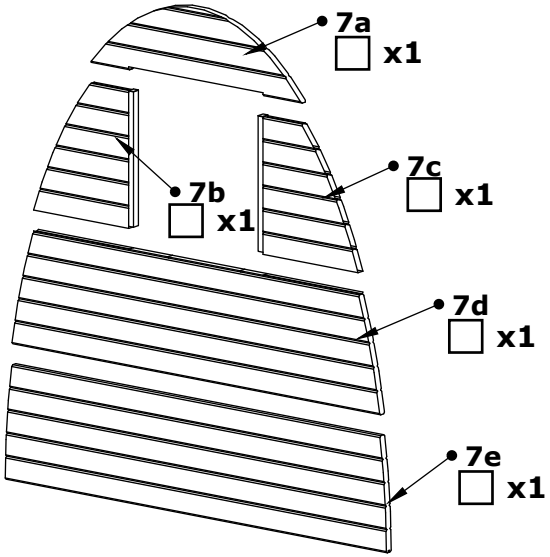
7a
x1
7b
x1
7c
x1
7d
x1
7e
x1

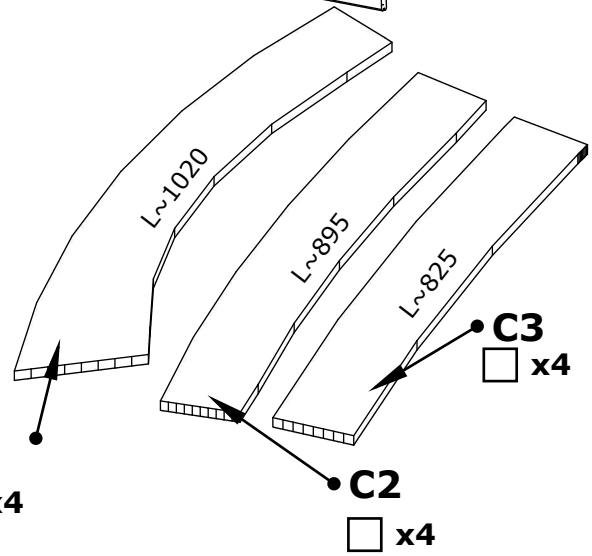
L~1020
L~895
L~825
C3
x4
C1
x4
C2
x4

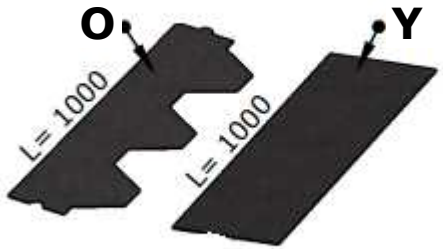
O
Y
L= 1000
L= 1000
7 pack.
x8

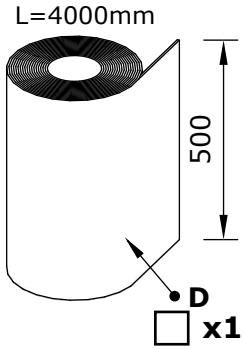
L=4000mm
500
D
x1

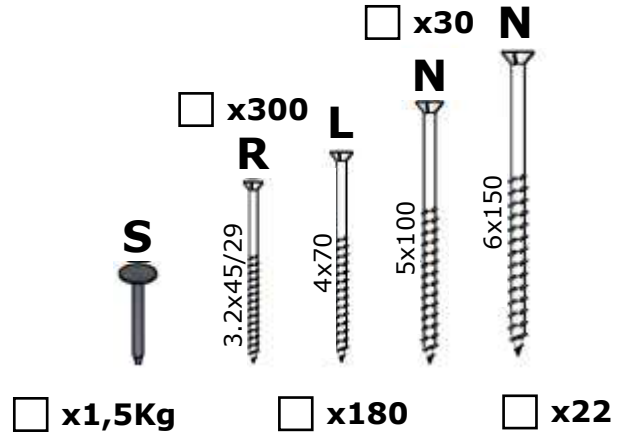
x30
N
x300
R
L
N
S
3.2x45/29
4x70
5x100
6x150
x1,5Kg
x180
x22

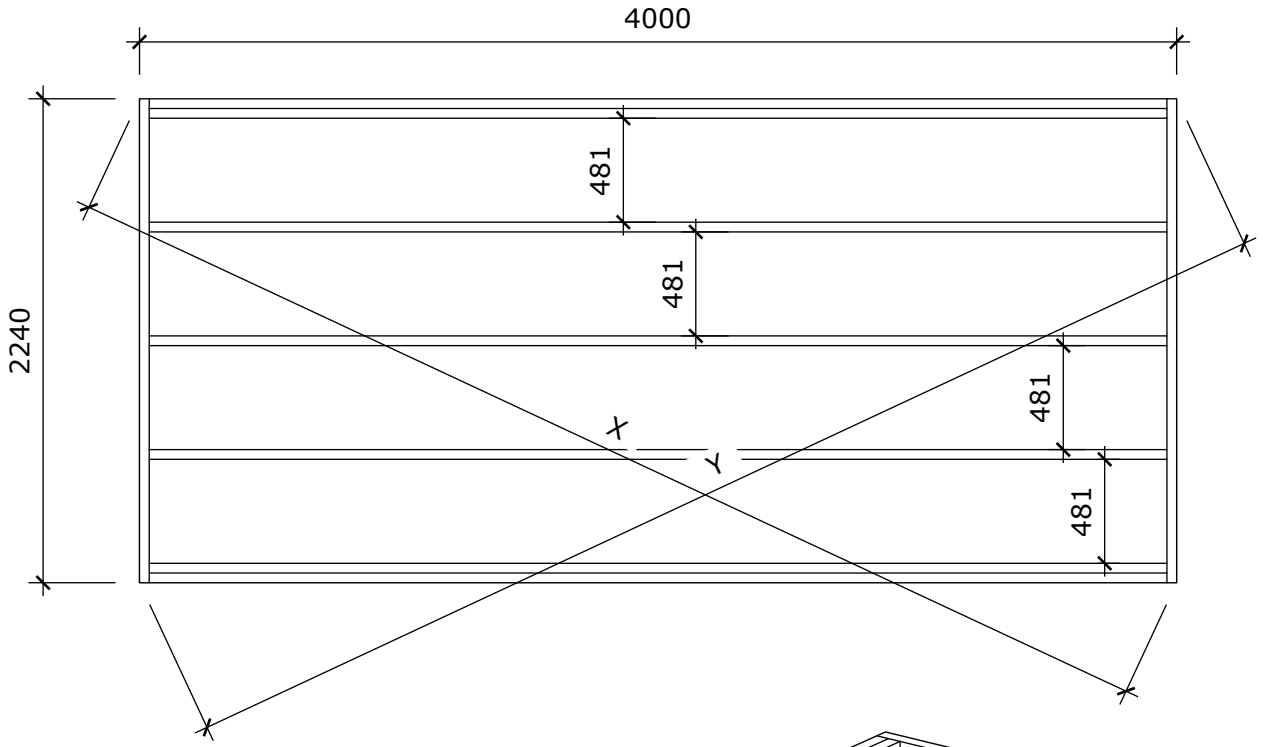

X=Y!

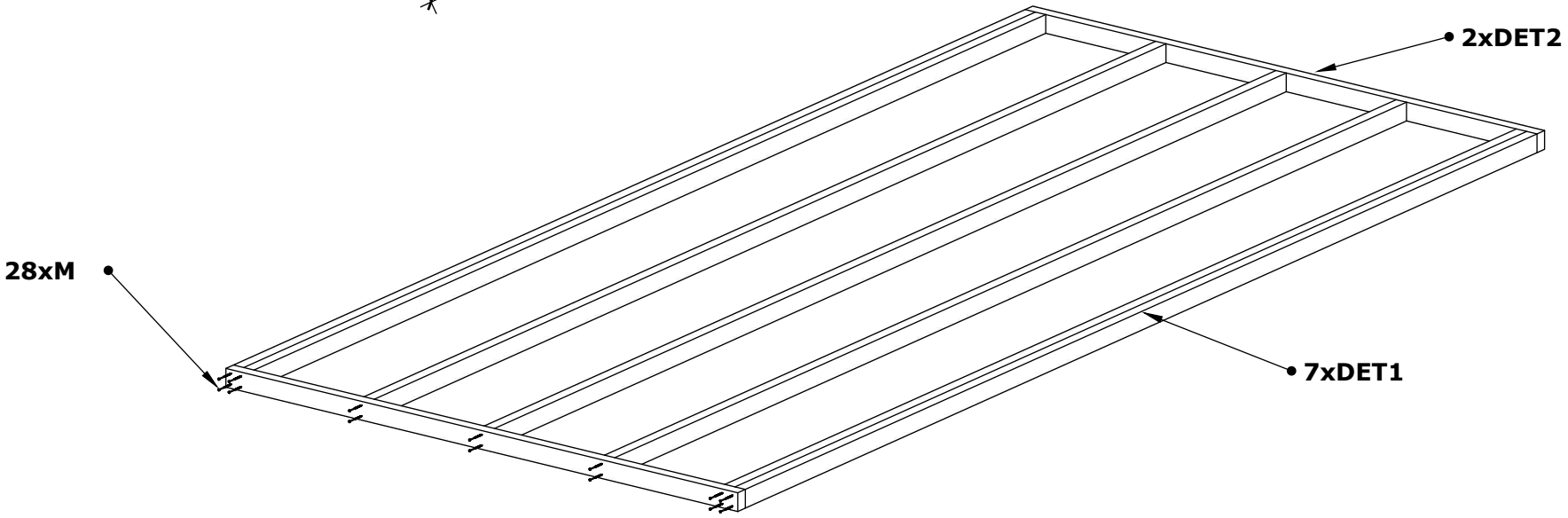

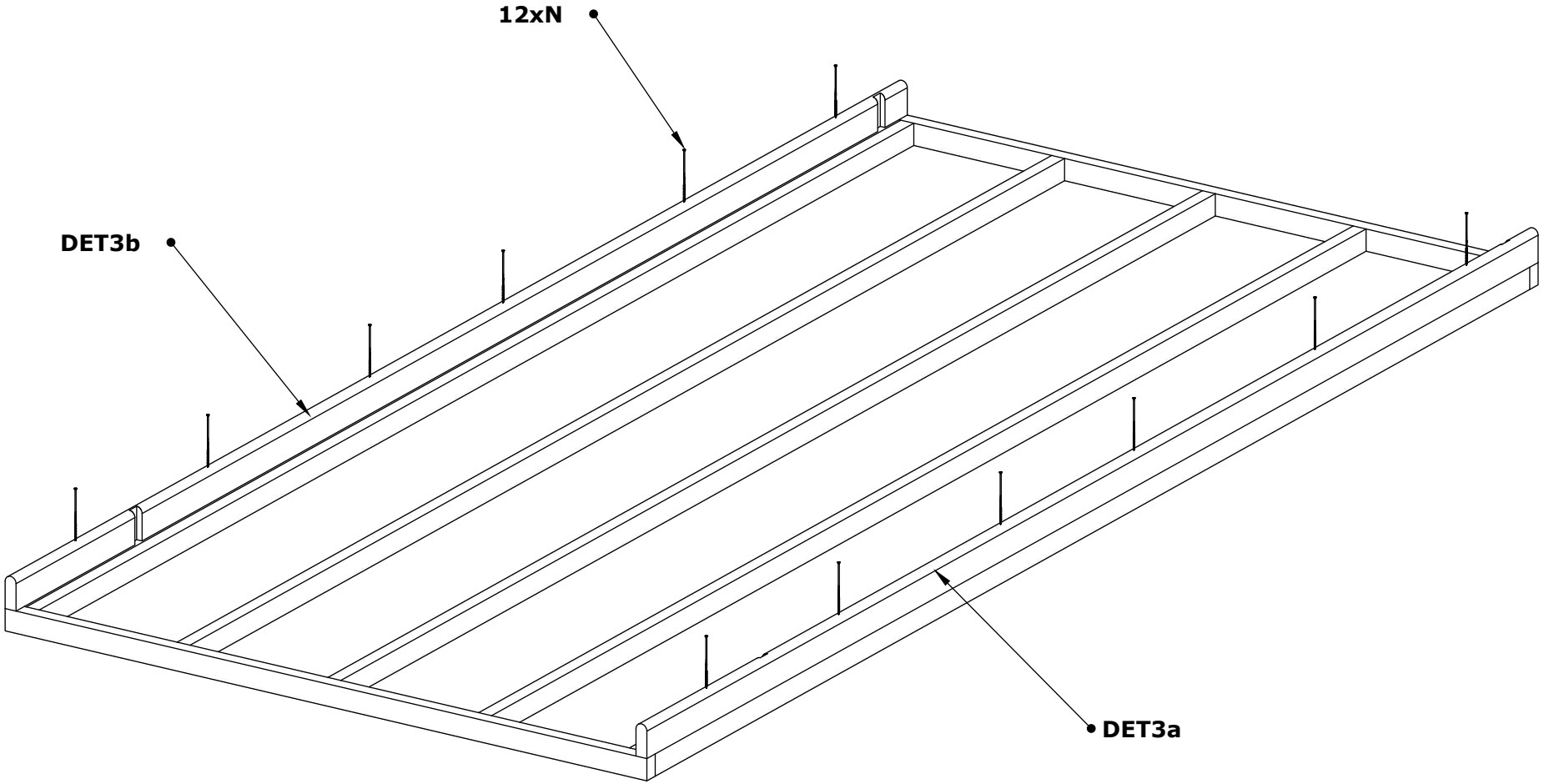
12xN
DET3b
DET3a

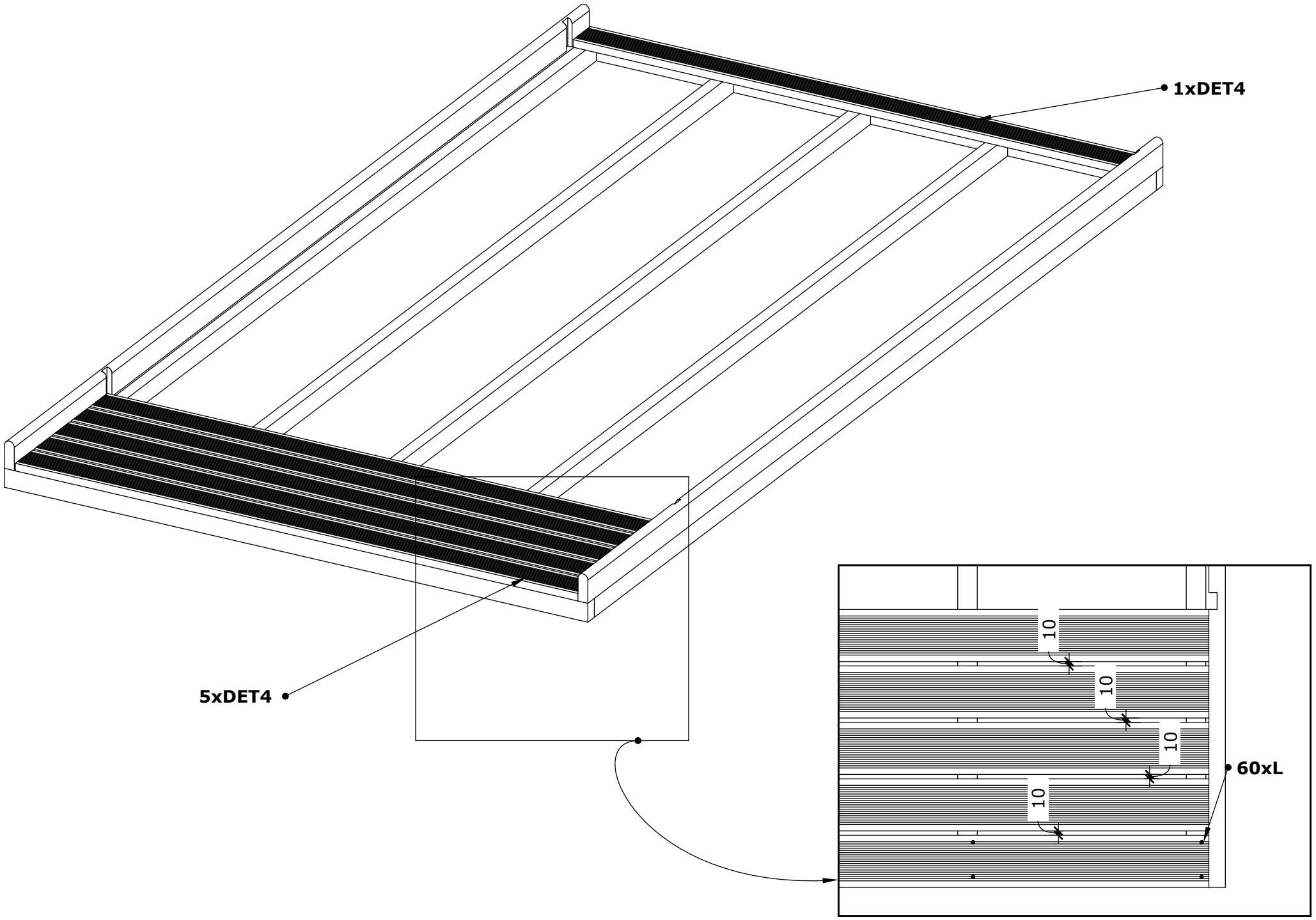
1xDET4
5xDET4
10
10
10
10
60xL

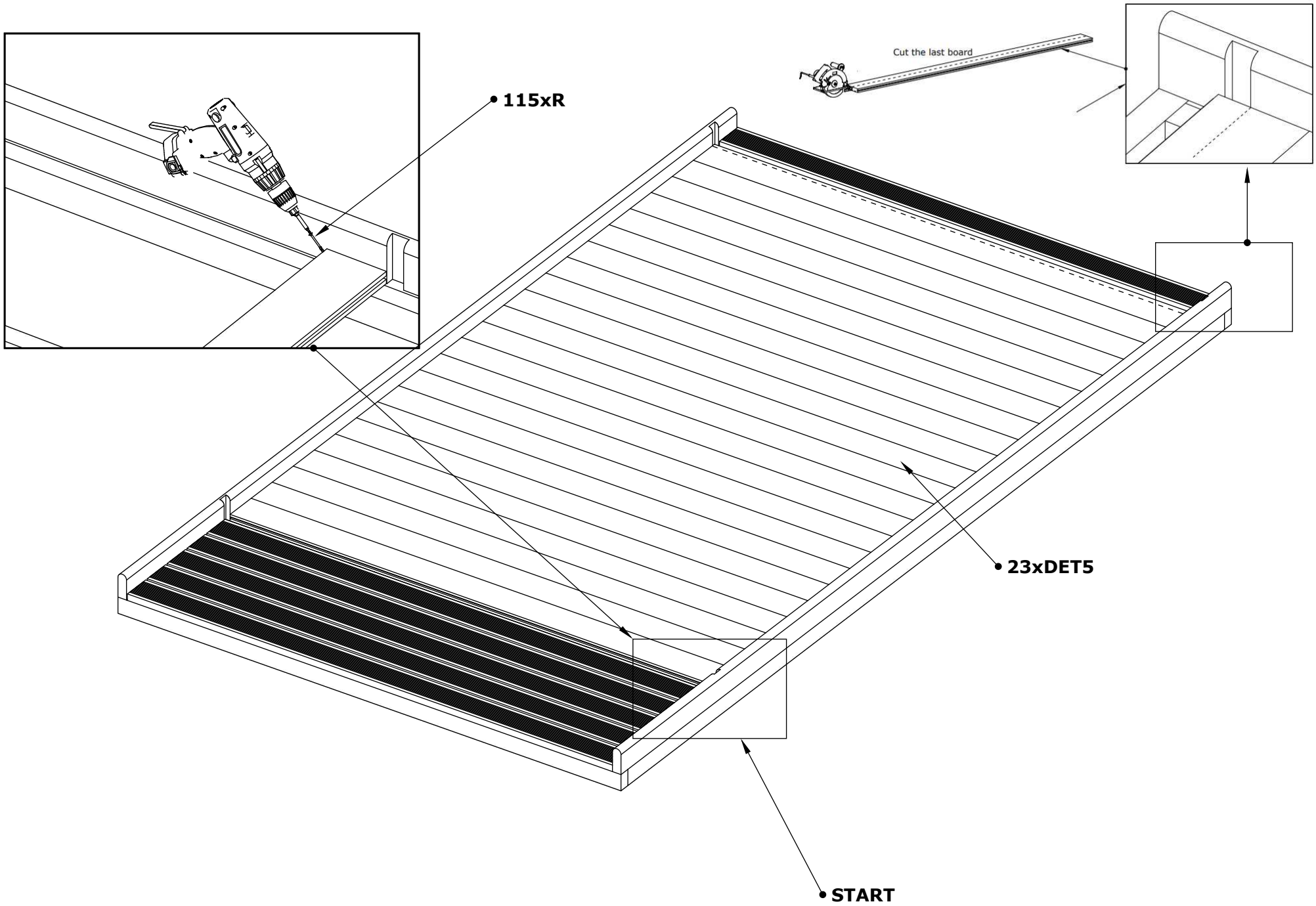
115xR
Cut the last board
23xDET5
START

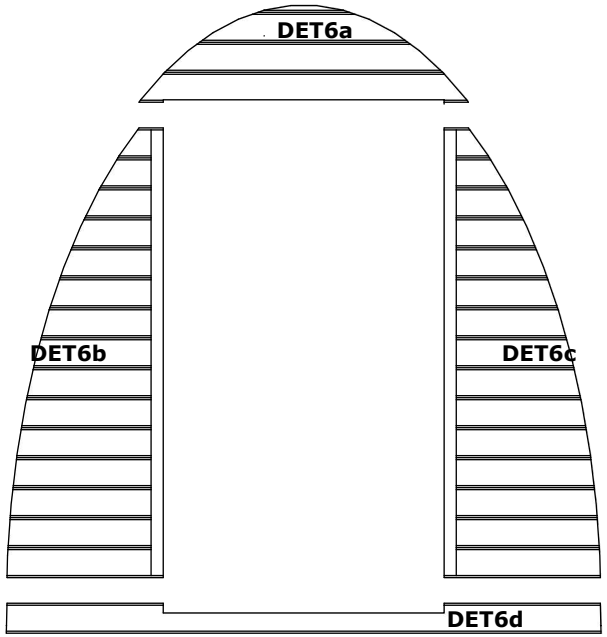
DET6a
DET6b
DET6c
DET6d

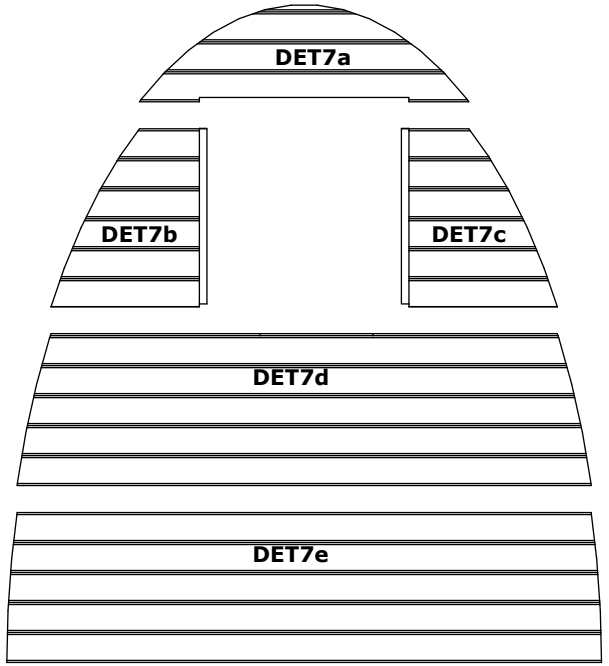
DET7a
DET7b
DET7c
DET7d
DET7e

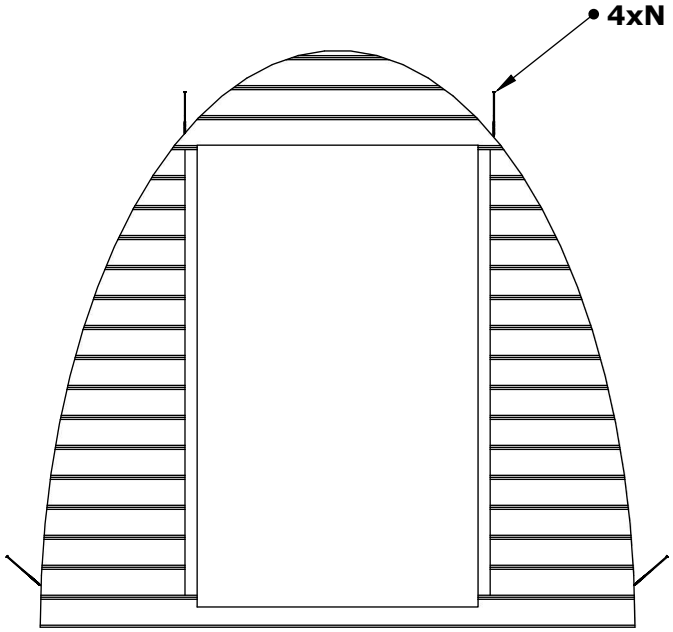
4xN

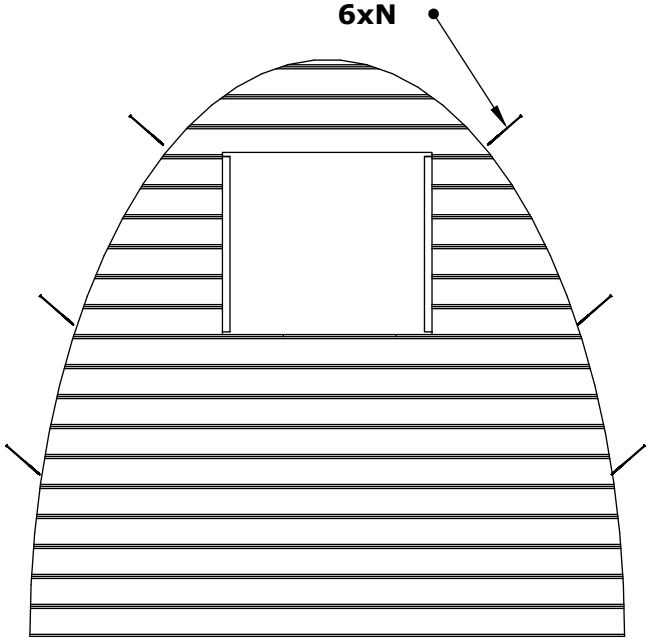
6xN

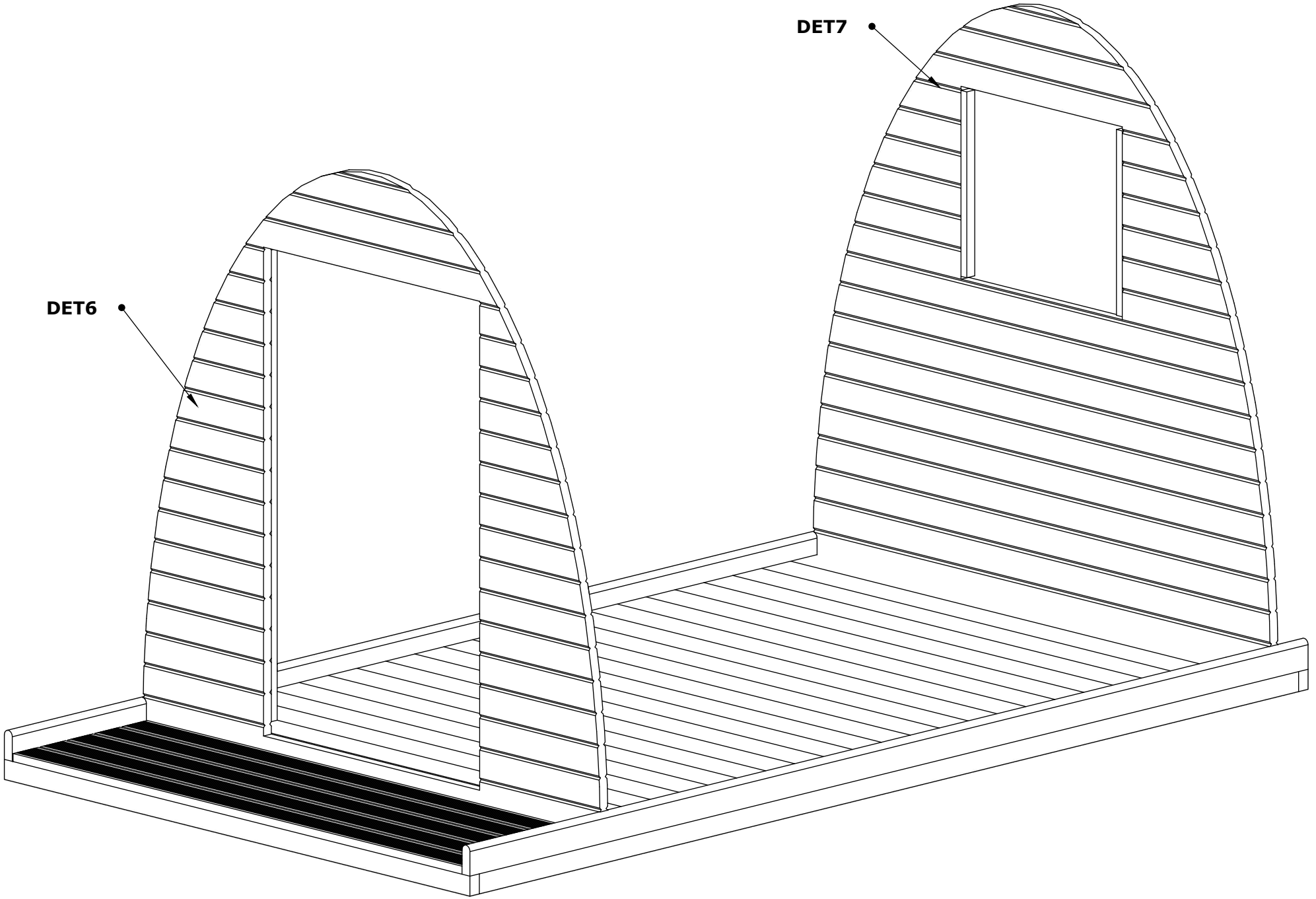
DET7
DET6

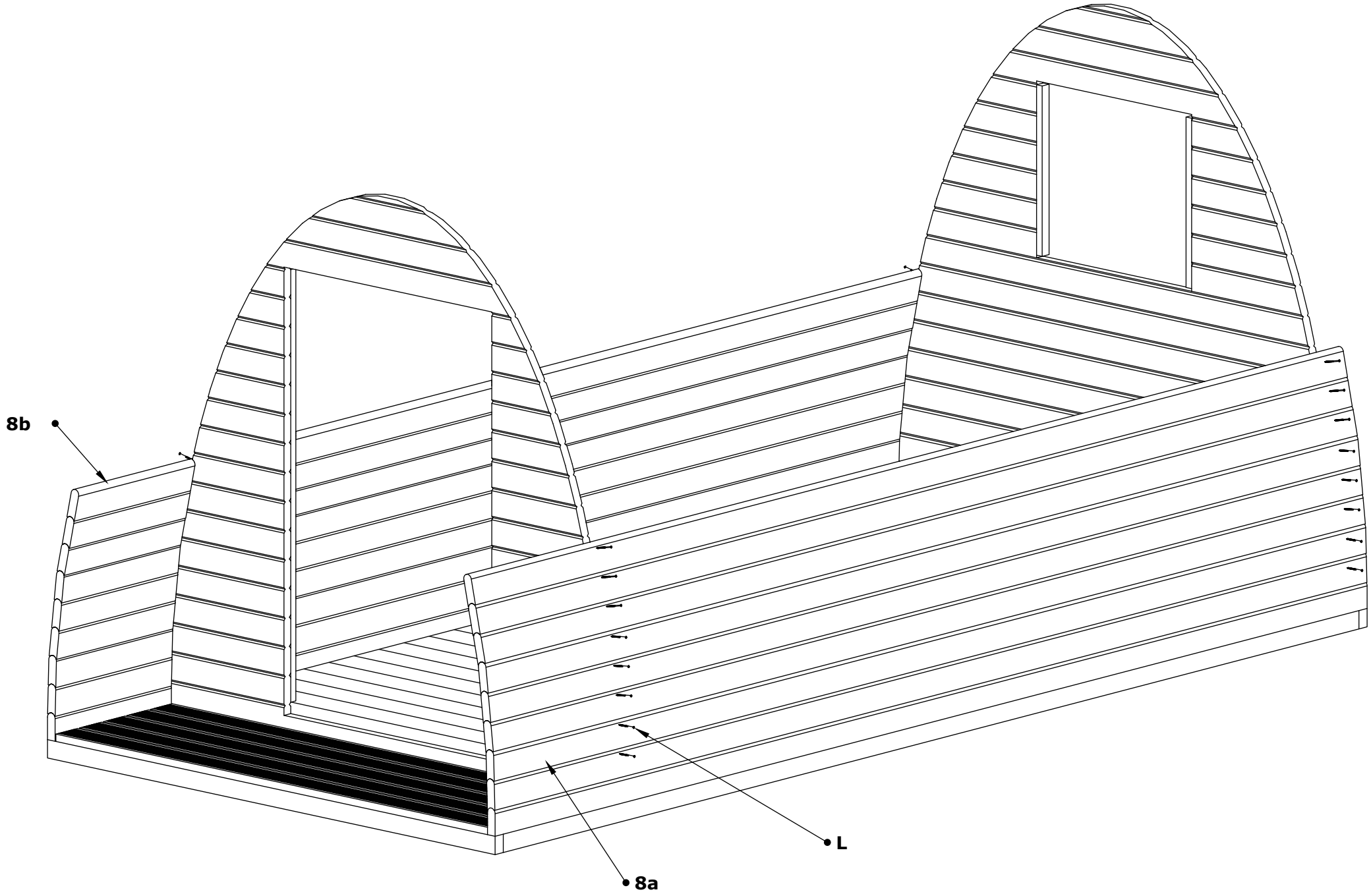
8b
L
8a

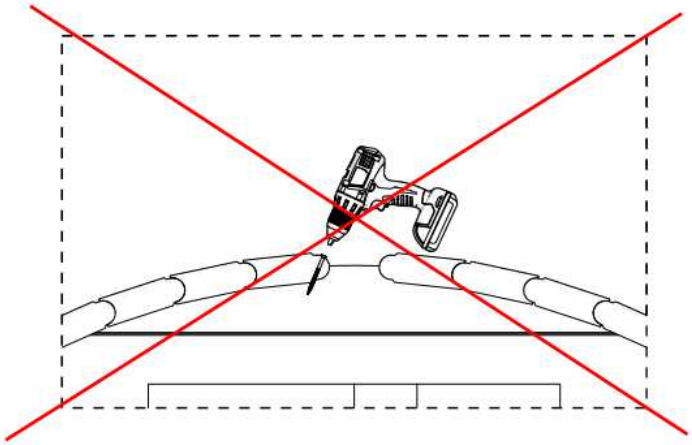

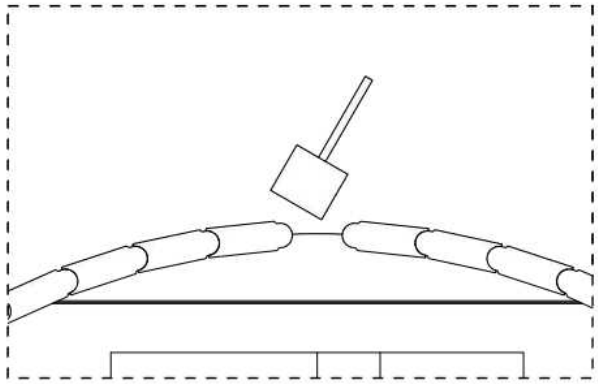

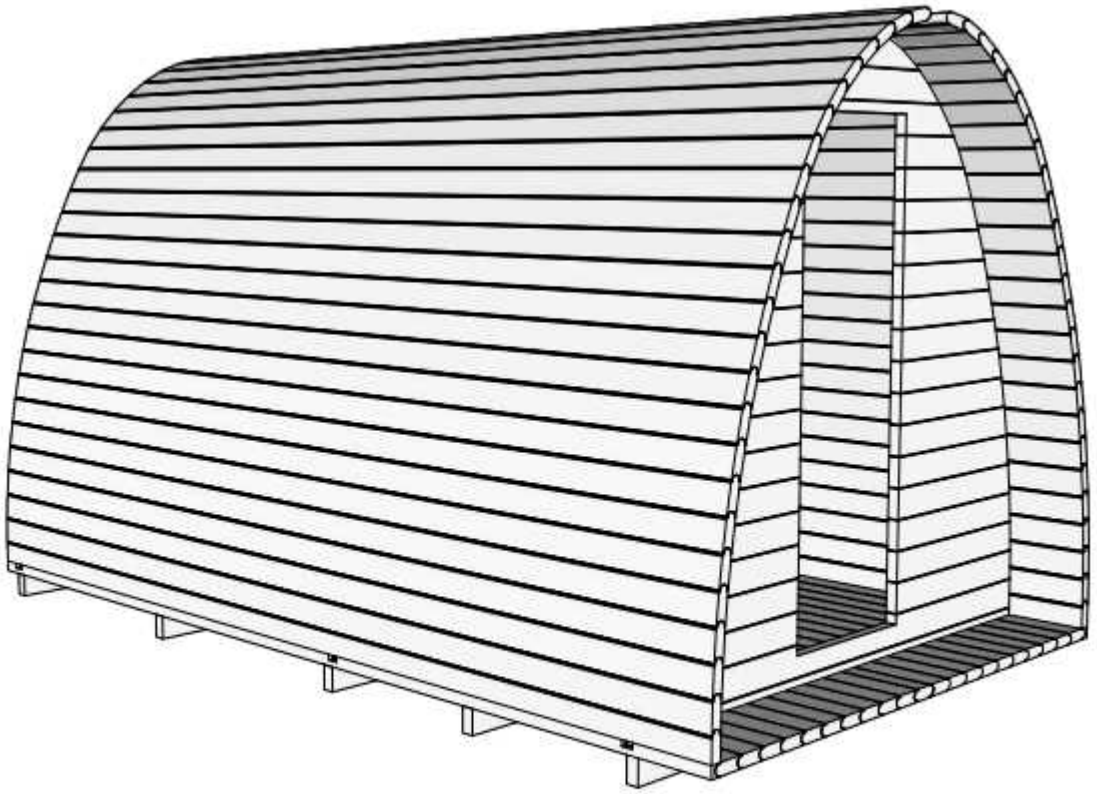

Measure both ends, since they might differ

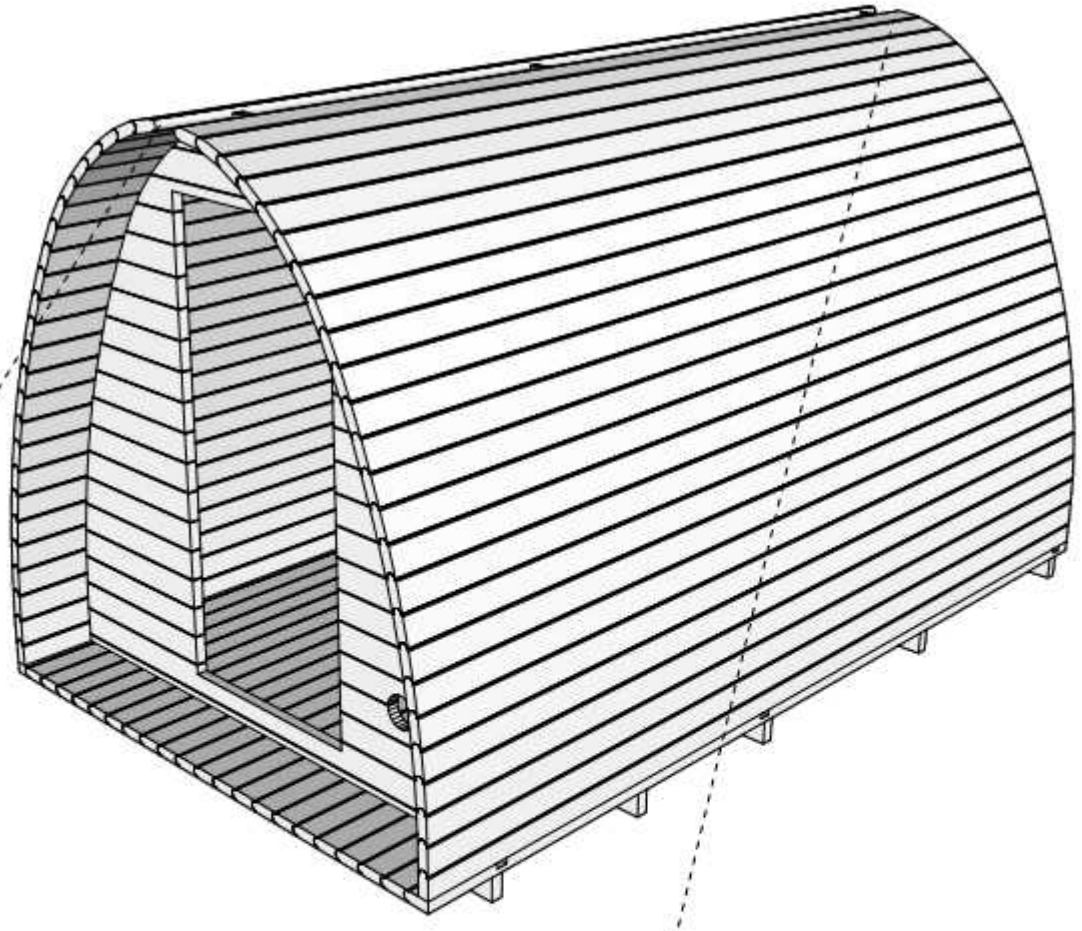

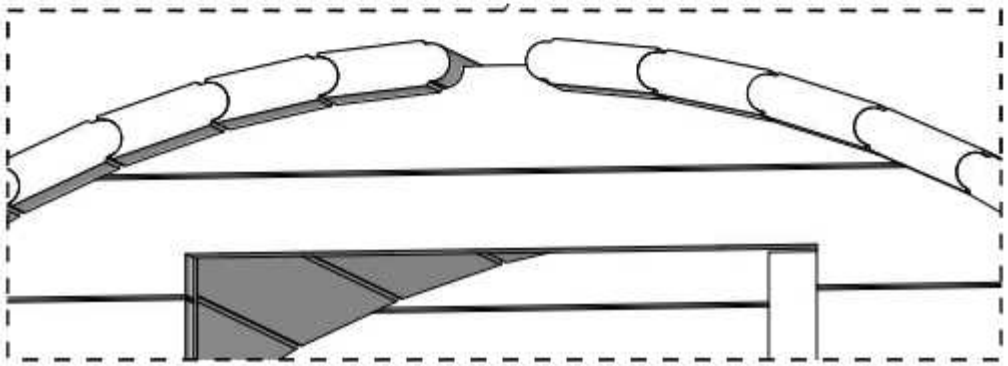

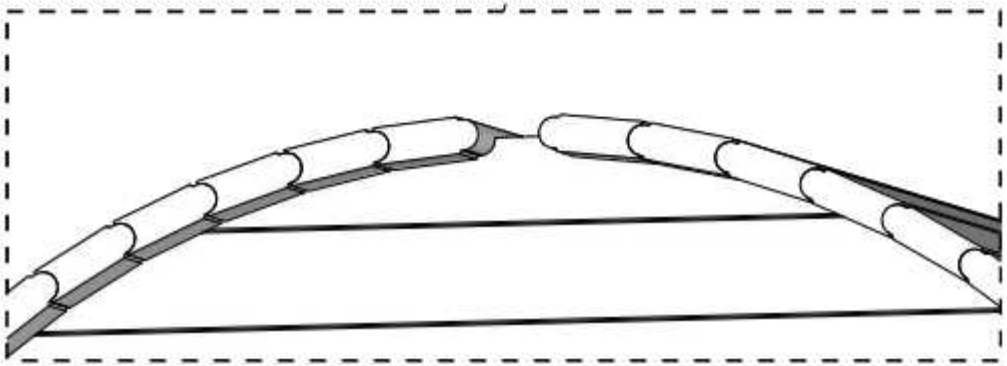

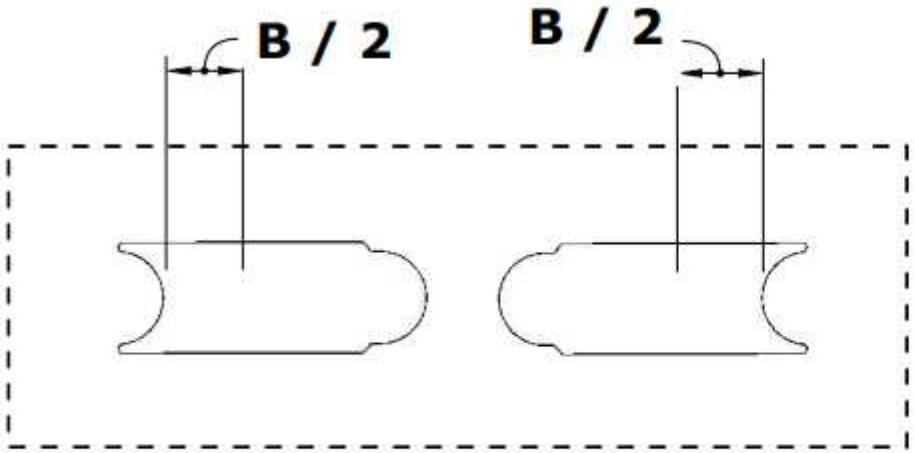

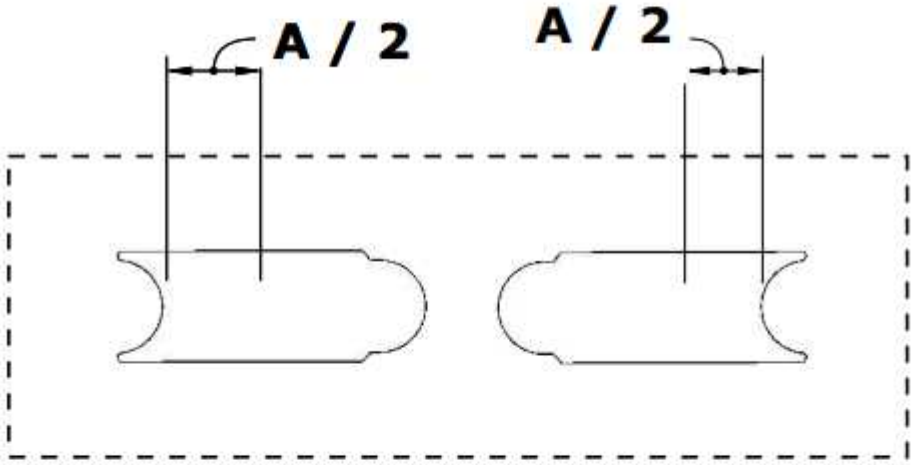

NB! Connect the points A-A and B-B before cutting

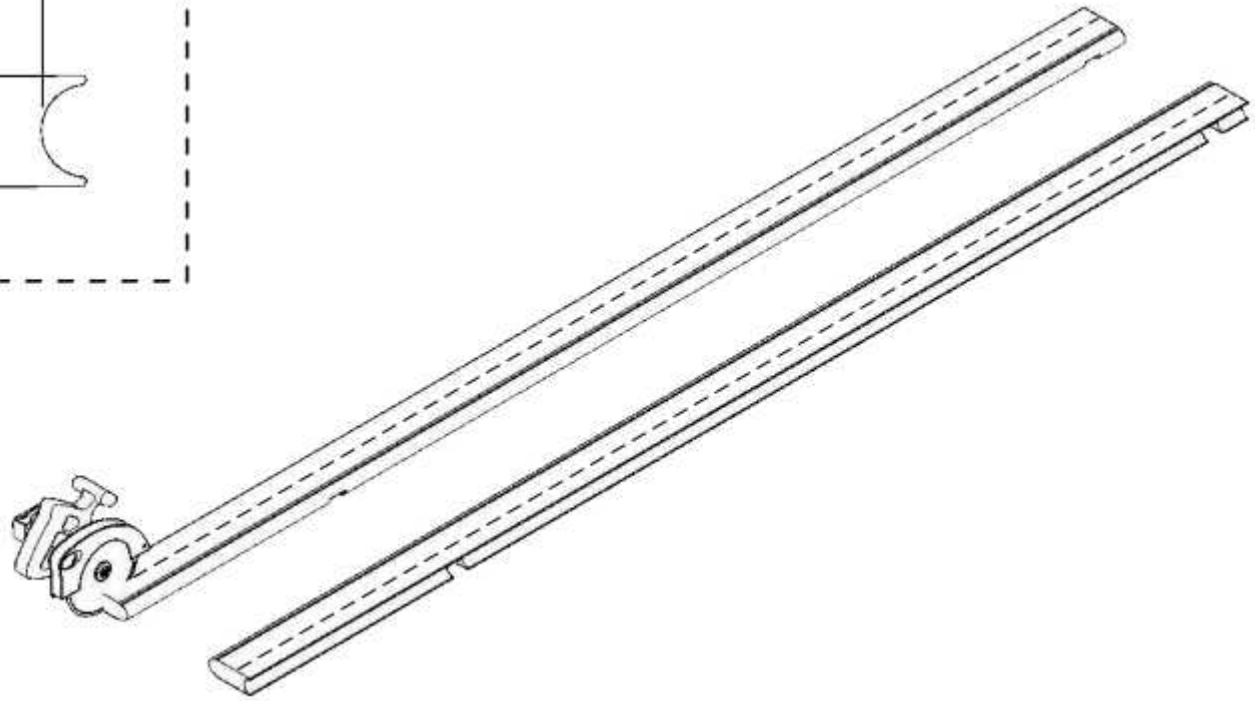

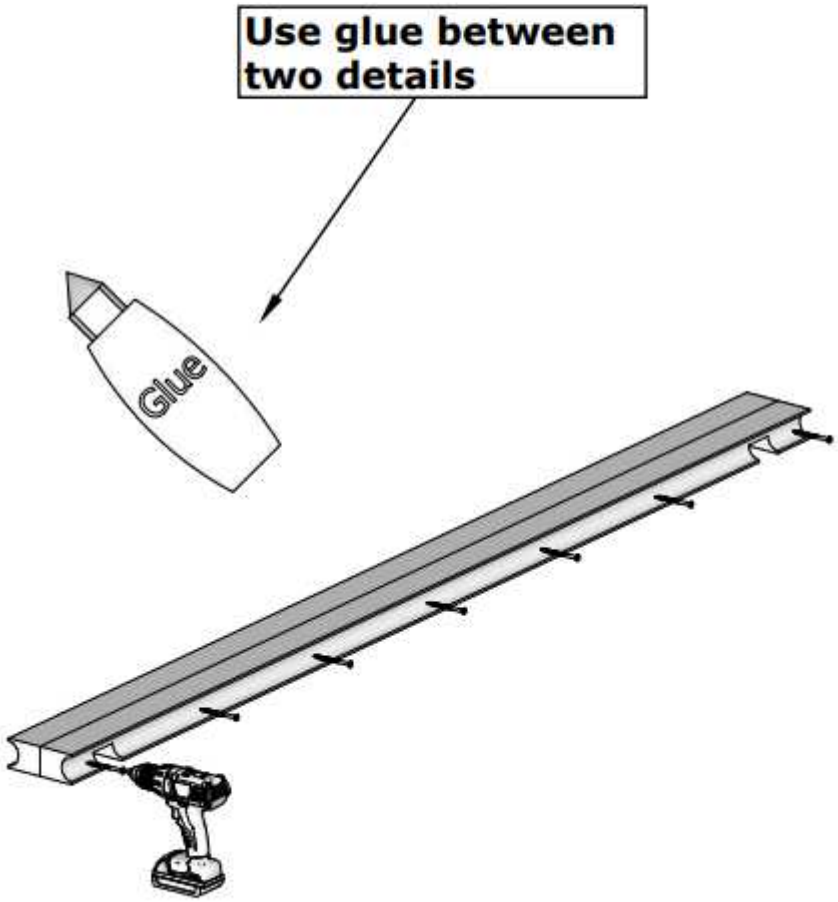
Use glue between
two details
Glue

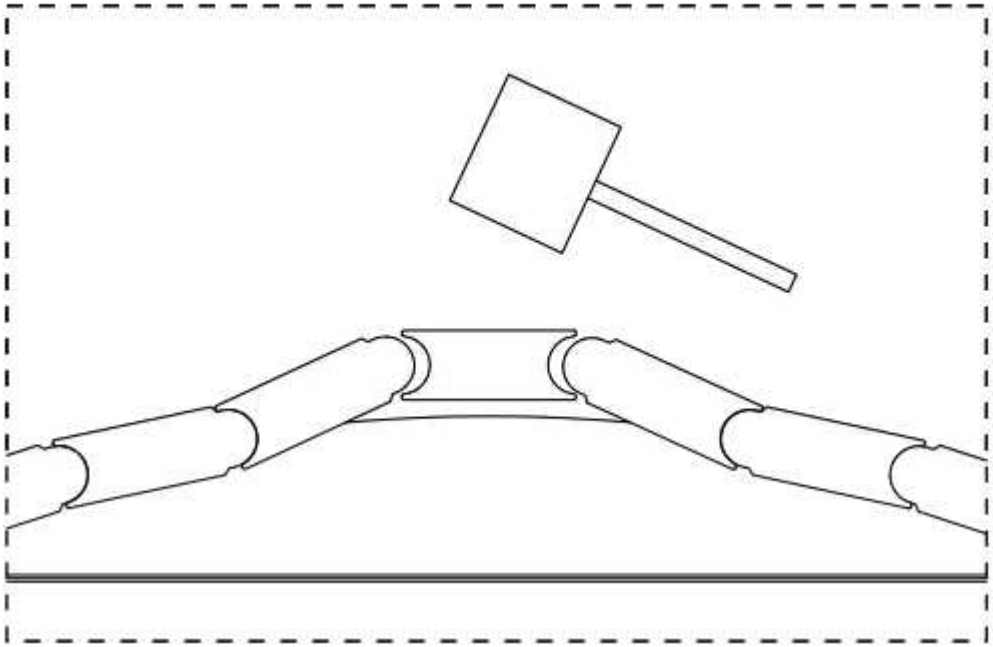

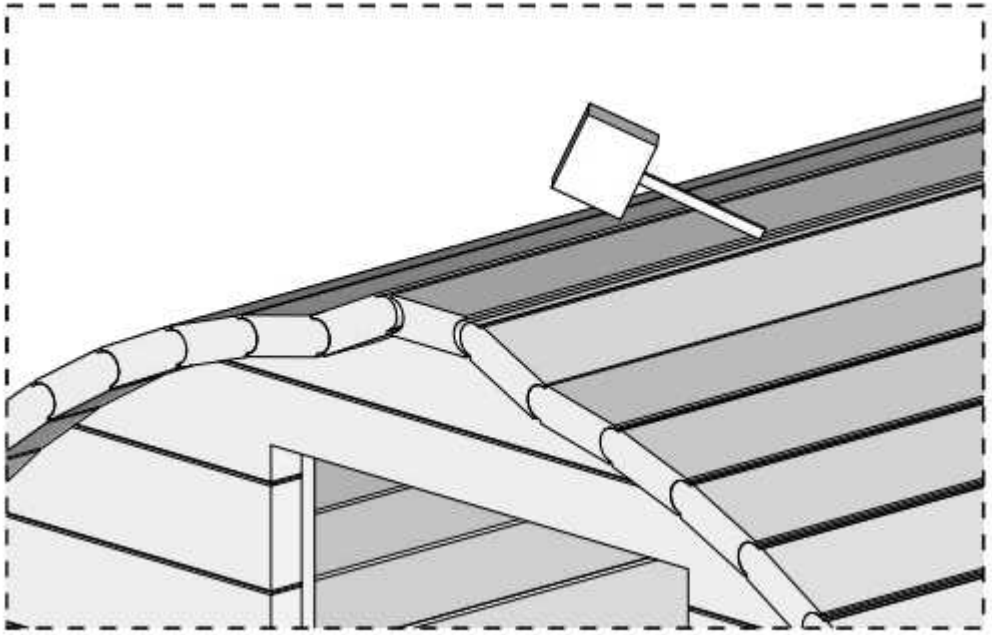

Use waterlevel for door and windows installation.

NB! Install door and windows from inside.



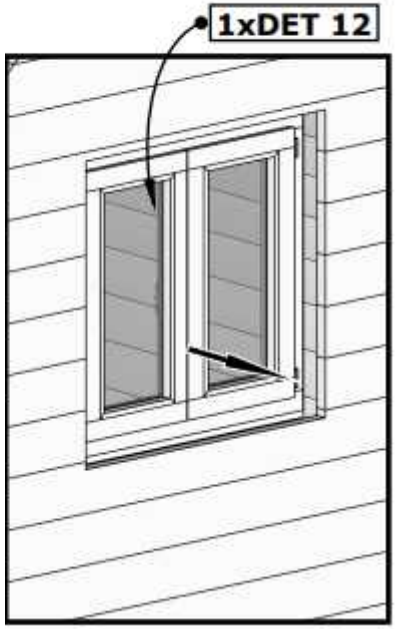

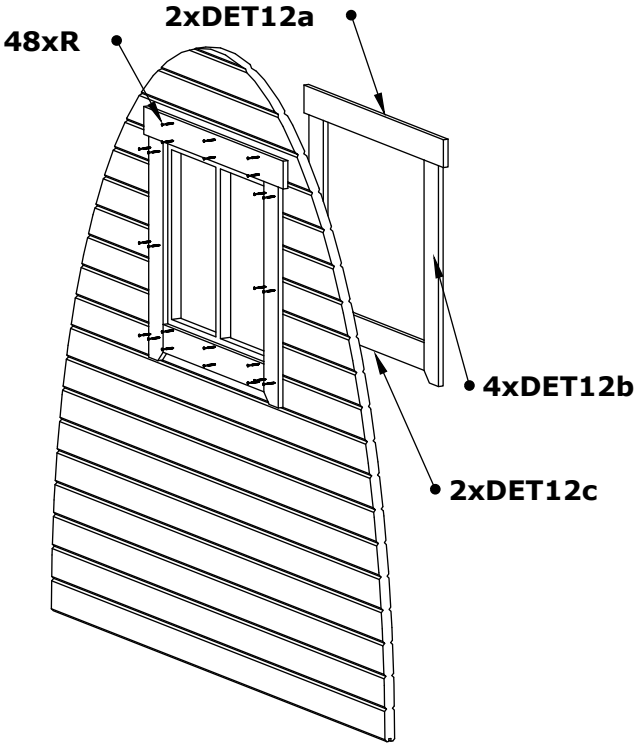

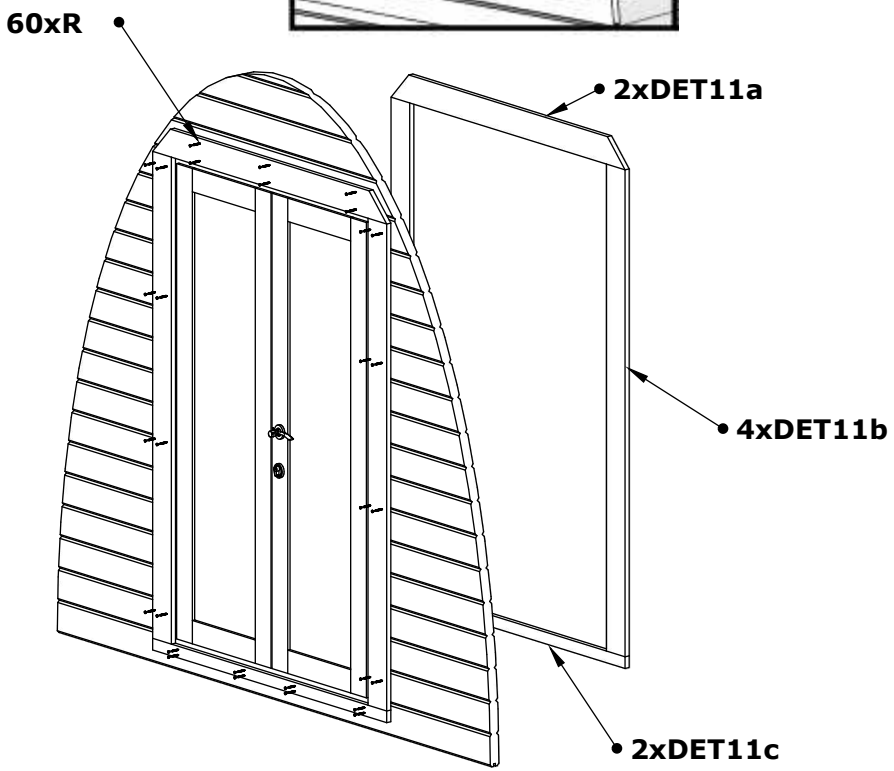

Cut floor salatses from DET15

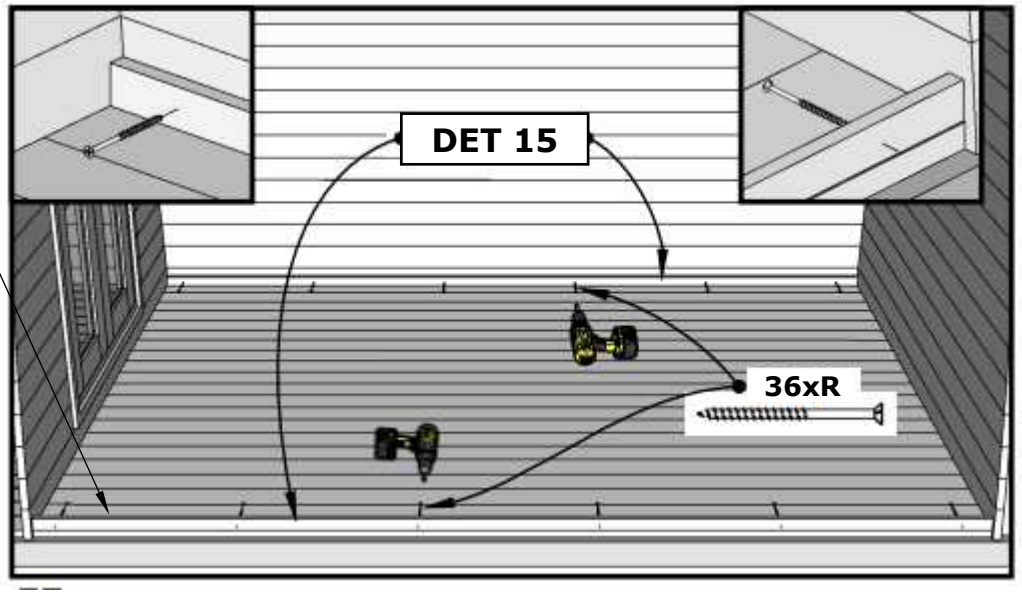

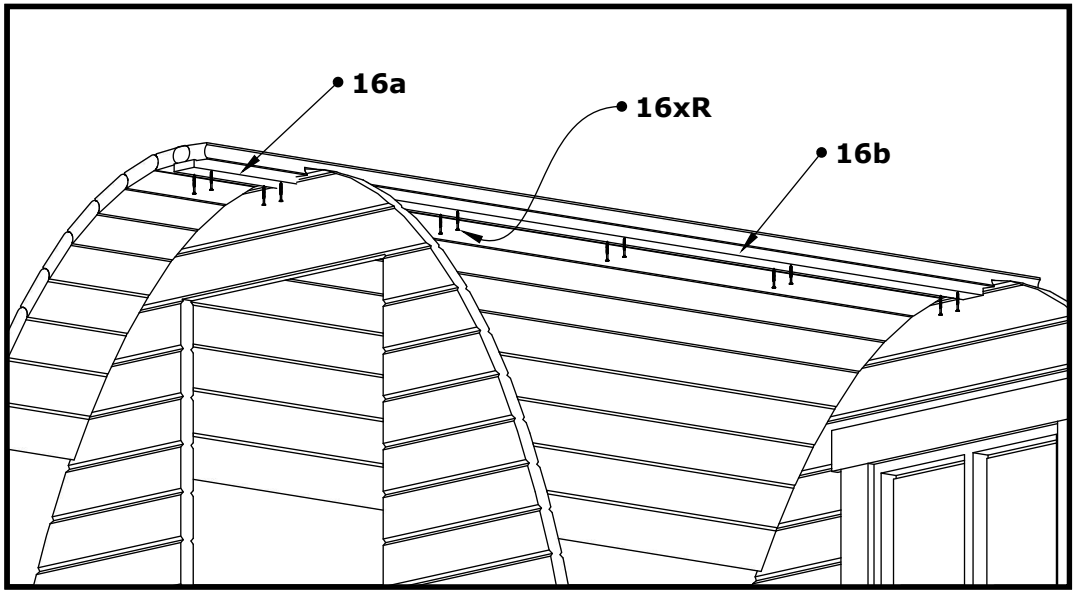

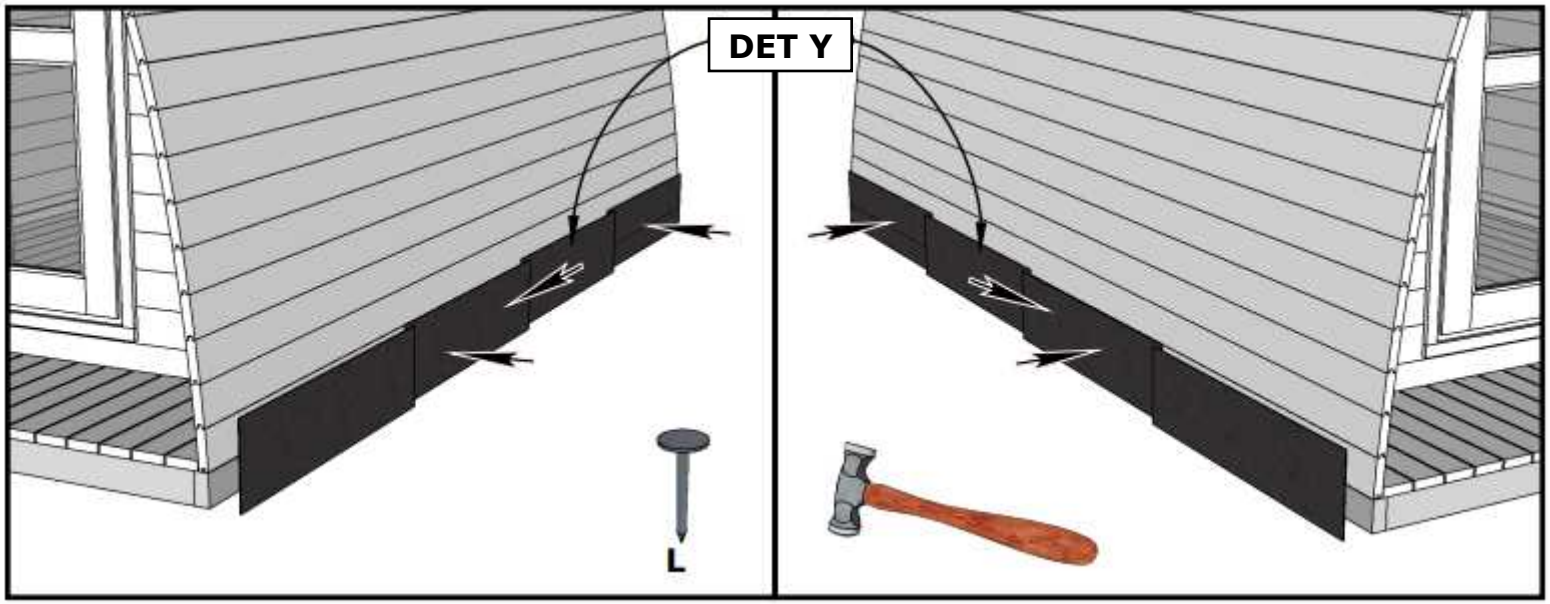
DET Y
L

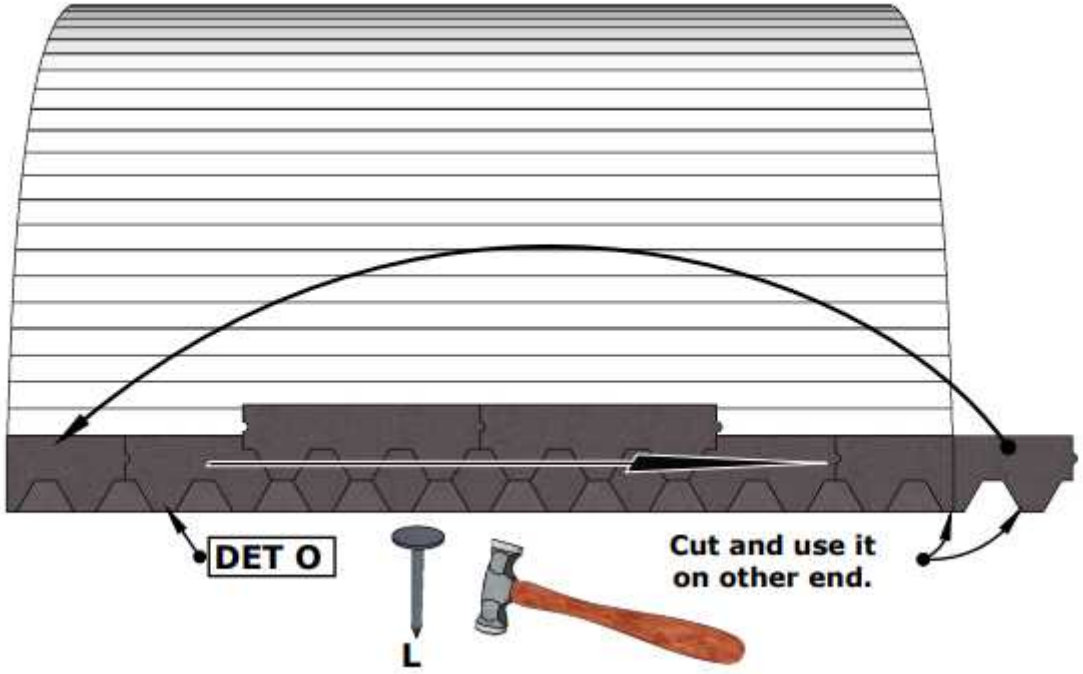
DET O
L
Cut and use it
on other end.

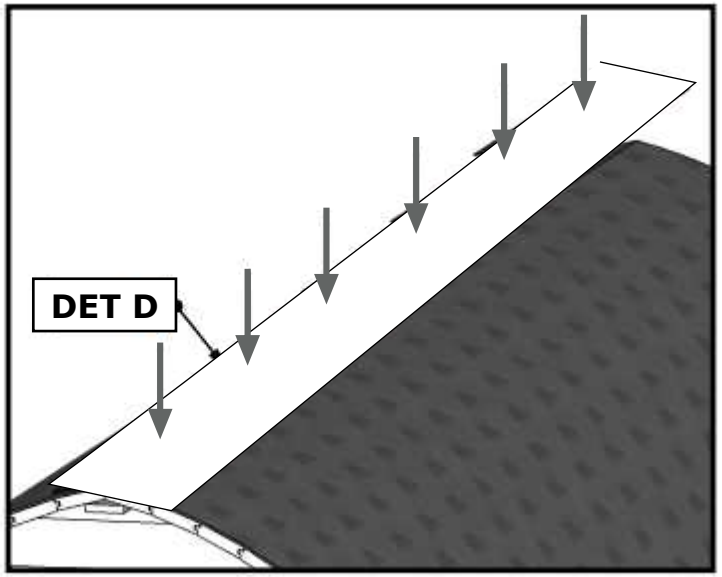
DET D

Use 4 screws on longer and 3 screws on shorter pieces

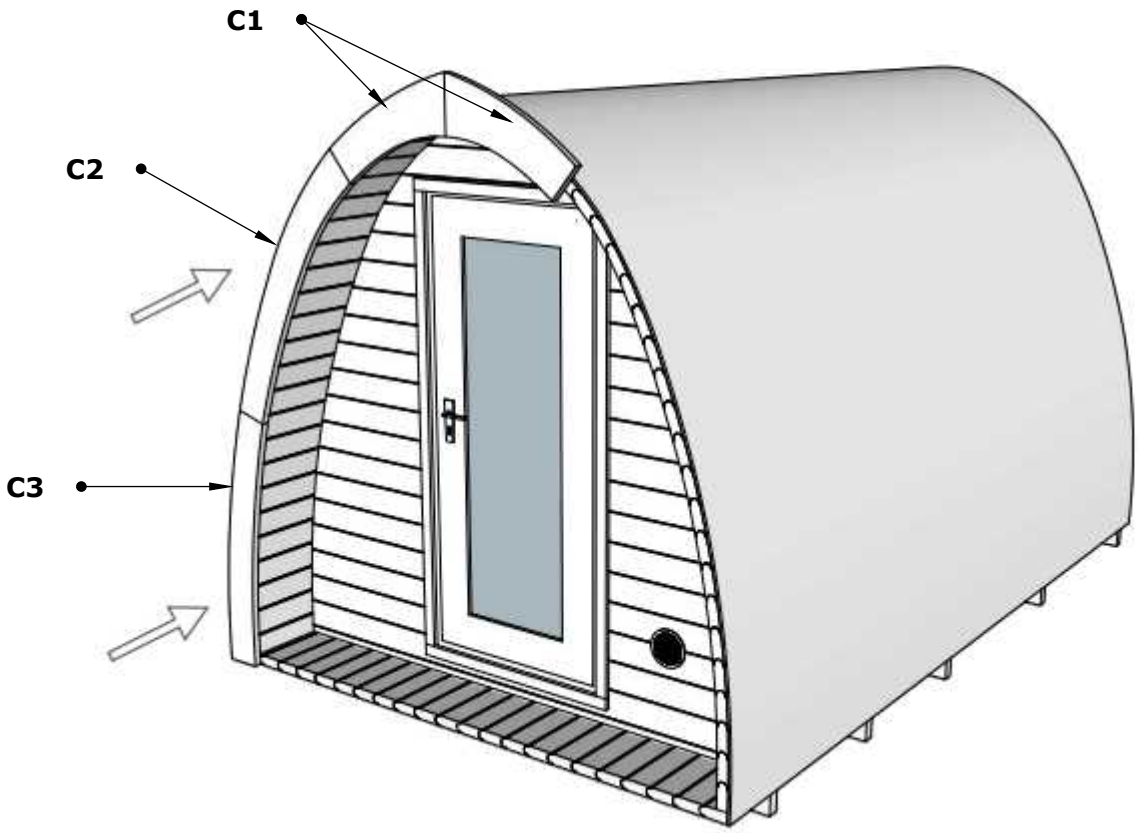

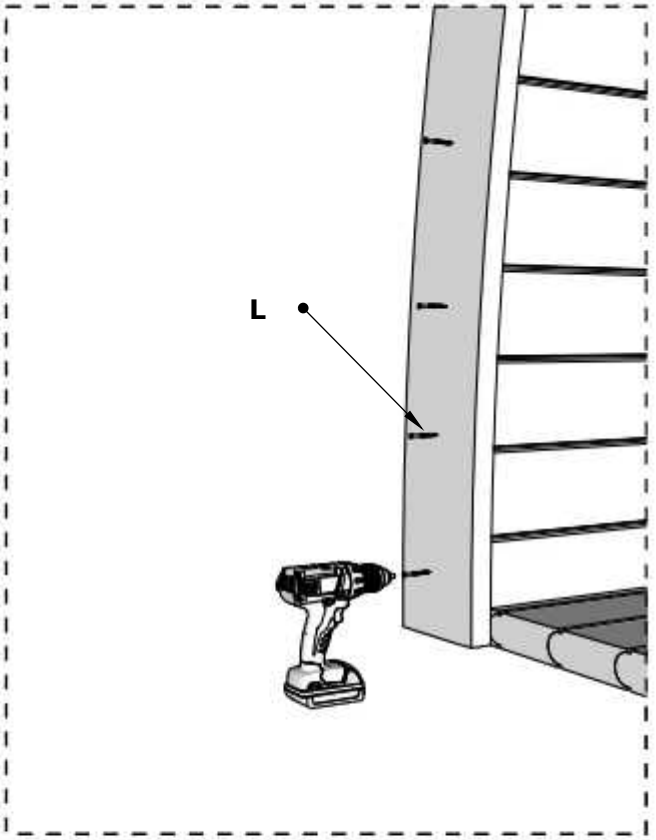

NB! Add cornice on both sides

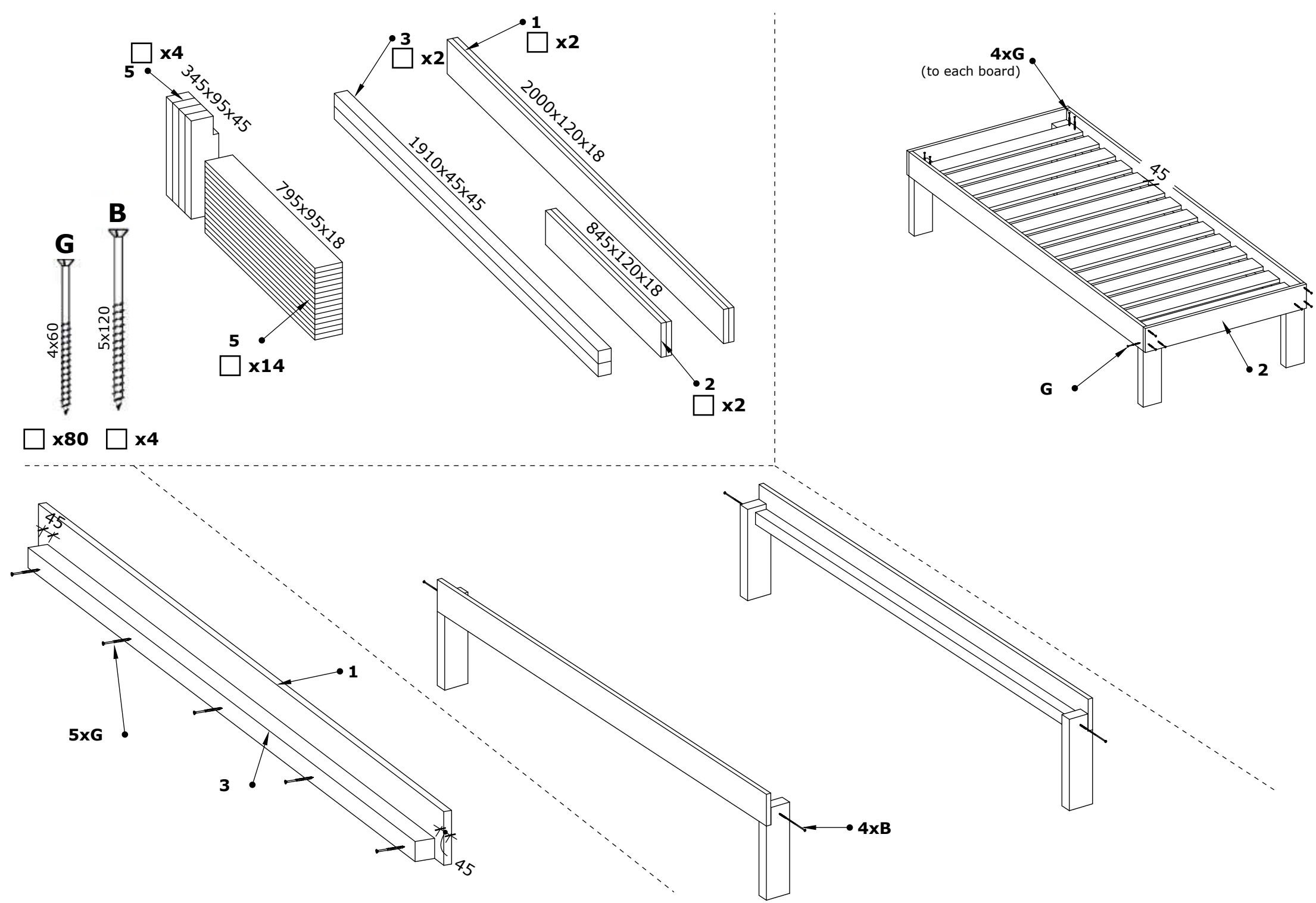
x4
5
345x95x45
795x95x18
5
x14
3
x2
1
x2
1910x45x45
2000x120x18
845x120x18
2
x2
G
4x60
B
5x120
x80
x4
4xG
(to each board)
45
G
2
45
1
5xG
3
45
4xB